GENERAL NOTES

1. Horizontal rail member shall be continuous thru fitting. Provide $\frac{7}{16}$ in. hole in fitting for $\frac{3}{8}$ in. bolt. Field drill $\frac{7}{16}$ in. hole in horizontal rail member. Provide $\frac{3}{8}$ in. washer & $\frac{3}{8}$ in. locknut for bolt.

2. Rail and grating shall span a minimum of three brackets.

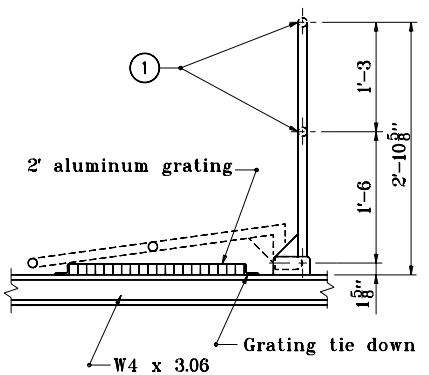

SIDE ELEVATION

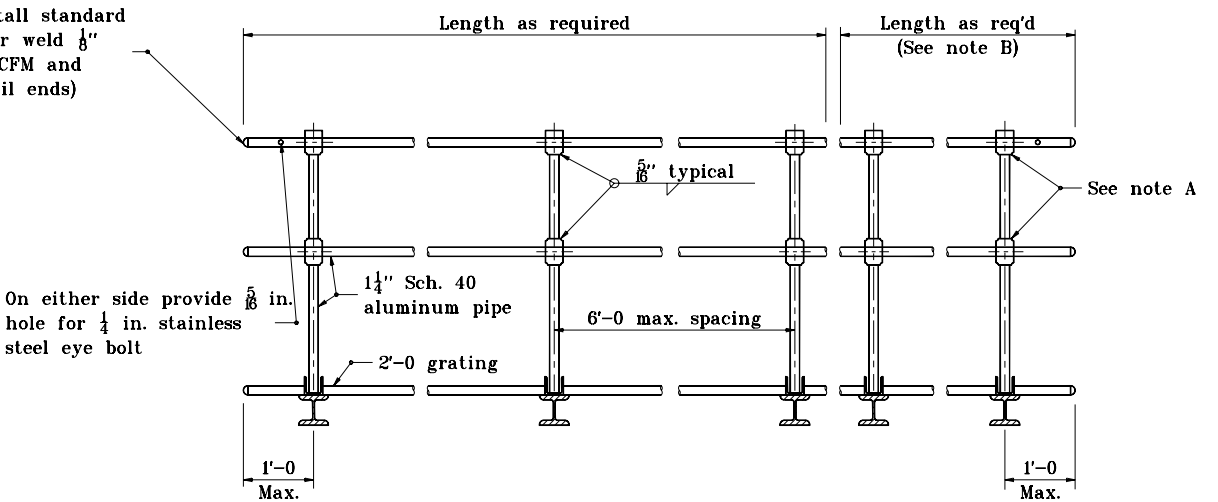

FRONT ELEVATION

INDIANA DEPARTMENT OF TRANSPORTATION

SIGN WALKWAY/ HANDRAIL DETAIL

SEPTEMBER 2001

STANDARD DRAWING NO. **E 802-SNWW-04**

ANTHONY L. UREMOVICH REGISTERED No. 18095 STATE OF INDIANA PROFESSIONAL ENGINEER

DESIGN STANDARDS ENGINEER

/s/ Anthony L. Uremovich 9-04-01
DESIGN STANDARDS ENGINEER DATE

/s/ Firooz Zandi 9-04-01
CHIEF HIGHWAY ENGINEER DATE