GENERAL NOTES

1. Dimensions B,D and Q to be determined by contractor to fit signs involved.
2. Sign panel shall be placed symmetrically about ℄ truss.

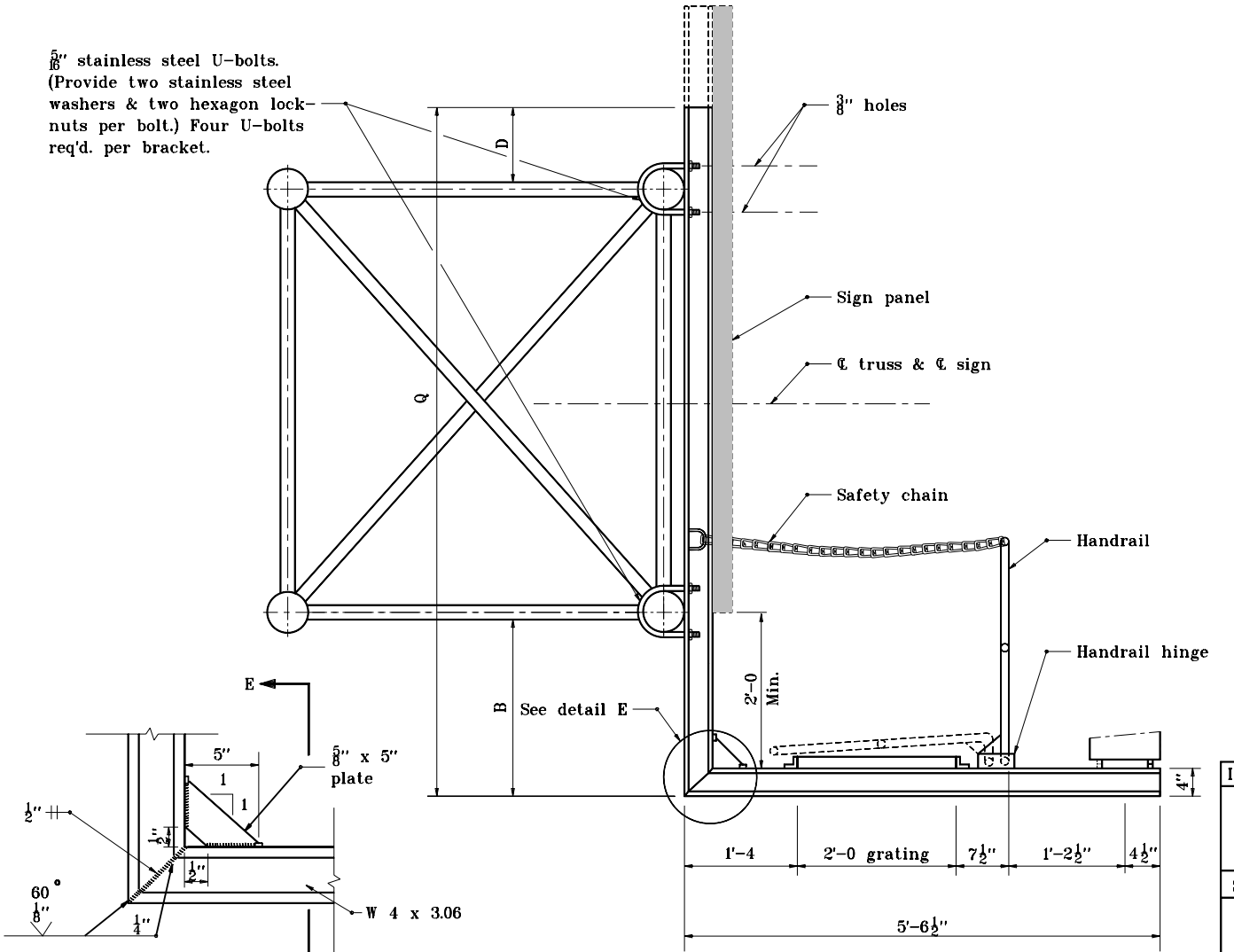

DETAIL E

SECTION A-A

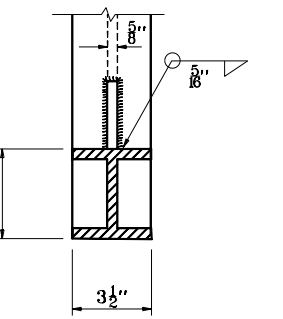

SECTION E-E

INDIANA DEPARTMENT OF TRANSPORTATION

SIGN TRUSS DETAILS

SEPTEMBER 2001

STANDARD DRAWING NO. E 802-SNWW-03

ANTHONY L. UREMOVICH REGISTERED No. 18095 STATE OF INDIANA PROFESSIONAL ENGINEER

DESIGN STANDARDS ENGINEER

/s/ Anthony L. Uremovich 9-04-01
DESIGN STANDARDS ENGINEER DATE

/s/ Firooz Zandi 9-04-01
CHIEF HIGHWAY ENGINEER DATE