GENERAL NOTES

1. Oxidation inhibitor shall be liberally applied to all surfaces that mate with a dissimilar material.
2. Grooves A & B to receive 1 #4 Cu. conductor.
3. Groove C to receive 1 #10 conductor.
4. Use of inhibiting compound is mandatory for all connections.
5. Multiple compression fitting shall be covered with snap-on fiber or plastic covers. Taping shall not be permitted.

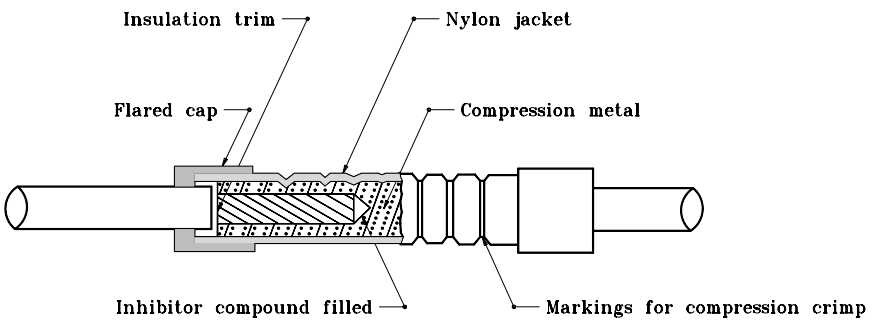

INSULATING LINK DETAIL

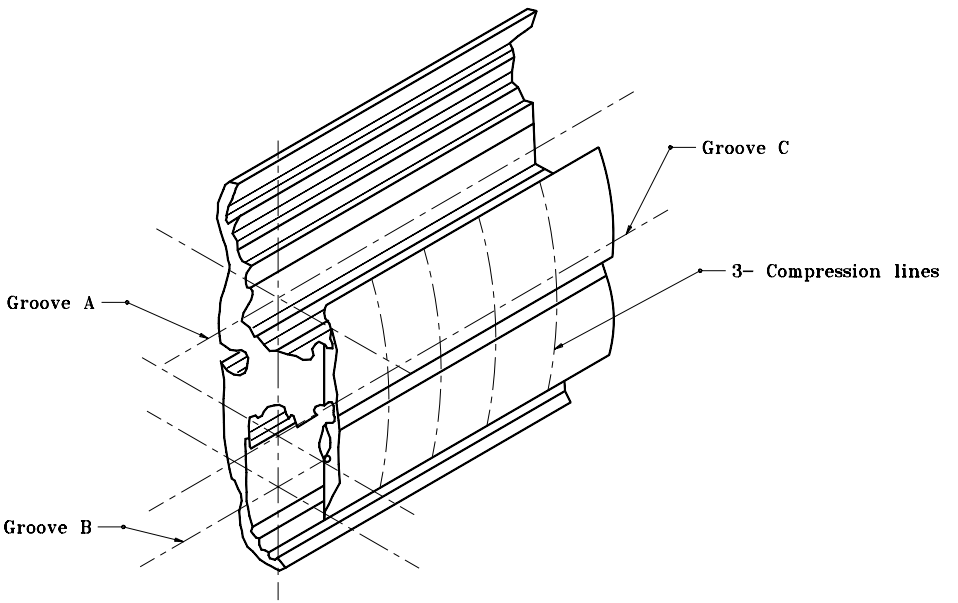

MULTIPLE COMPRESSION FITTING DETAIL

INDIANA DEPARTMENT OF TRANSPORTATION

SIGN WIRING DETAILS

SEPTEMBER 2001

STANDARD DRAWING NO. **E 802-SNWR-04**

ANTHONY L. UREMOVICH REGISTERED No. 18095 STATE OF INDIANA PROFESSIONAL ENGINEER

DESIGN STANDARDS ENGINEER

/s/ Anthony L. Uremovich 9-04-01
DESIGN STANDARDS ENGINEER DATE

/s/ Firooz Zandi 9-04-01
CHIEF HIGHWAY ENGINEER DATE