NOTES:

1. After threading, coat or mechanically galvanize as required.

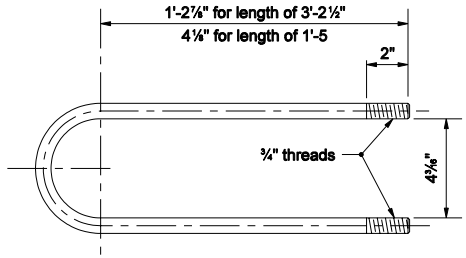

¾ IN. STAINLESS STEEL U-BOLT DETAIL

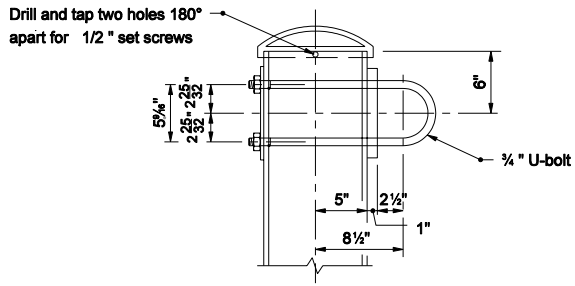

UPPER CHORD CONNECTION DETAIL

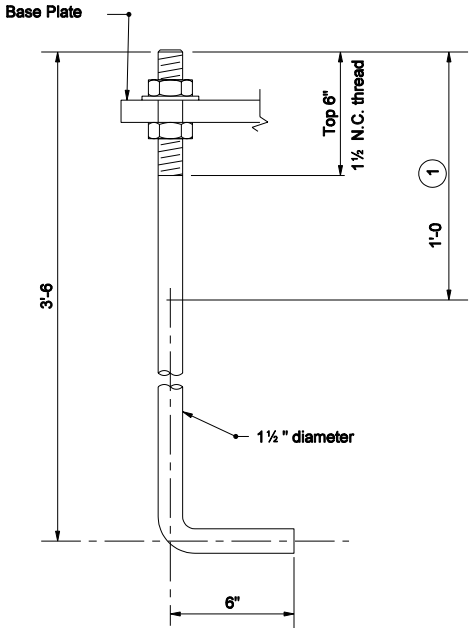

ANCHOR BOLT DETAIL

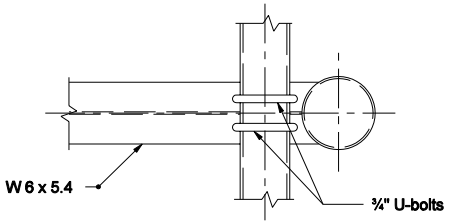

LOWER CHORD CONNECTION DETAIL

INDIANA DEPARTMENT OF TRANSPORTATION

ALUMINUM STRUCTURE BOLT DETAILS

MARCH 2004

STANDARD DRAWING NO. E 802-SNOH-06

RICHARD L. VanCLEAVE REGISTERED No. 9750 STATE OF INDIANA PROFESSIONAL ENGINEER

DESIGN STANDARDS ENGINEER

/s/ Richard L. VanCleave 3-01-04
DESIGN STANDARDS ENGINEER DATE

/s/ Richard K. Smutzer 3-01-04
CHIEF HIGHWAY ENGINEER DATE