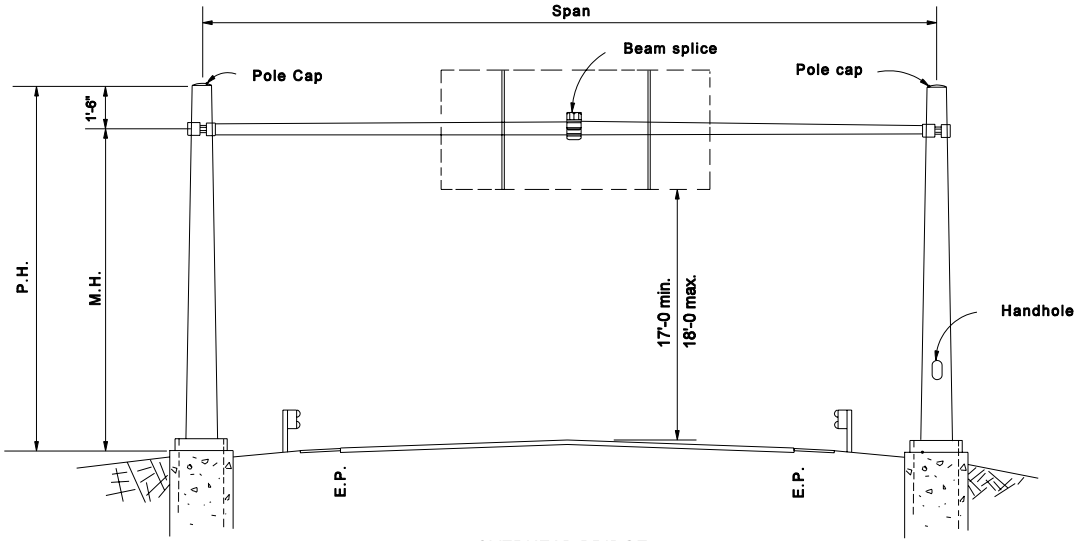

OVERHEAD BRIDGE

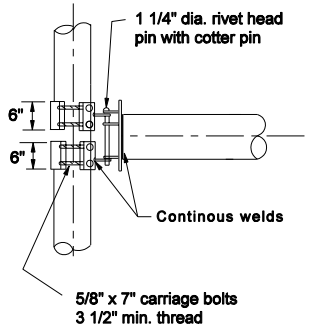

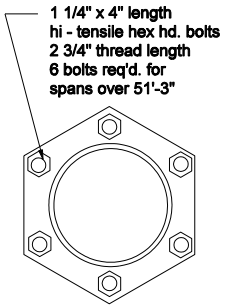

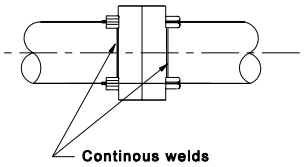

BEAM SPLICE

All Dimension are in mm unless otherwise specfied

INDIANA DEPARTMENT OF TRANSPORTATION

OVERHEAD SIGN BRIDGE SPANS

MARCH 2004

STANDARD DRAWING NO. E 802-SNOB-01

RICHARD L. VanCLEAVE REGISTERED No. 9750 STATE OF INDIANA PROFESSIONAL ENGINEER

DESIGN STANDARDS ENGINEER

/s/ Richard L.VanCleave 3-01-04
DESIGN STANDARDS ENGINEER DATE

/s/ Richard K.Smutzer 3-01-04
CHIEF HIGHWAY ENGINEER DATE