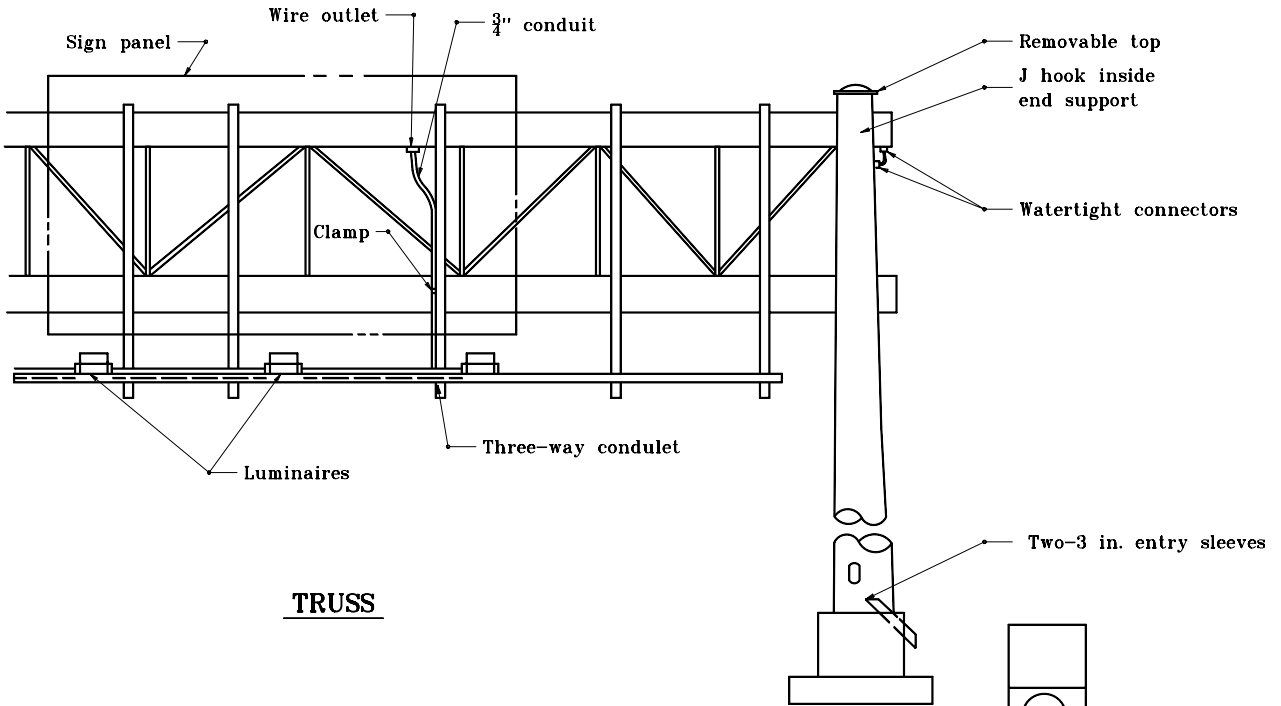

TRUSS

GENERAL NOTES

1. For grating details see Std. Dwg. No. E 802-SNWW-02.

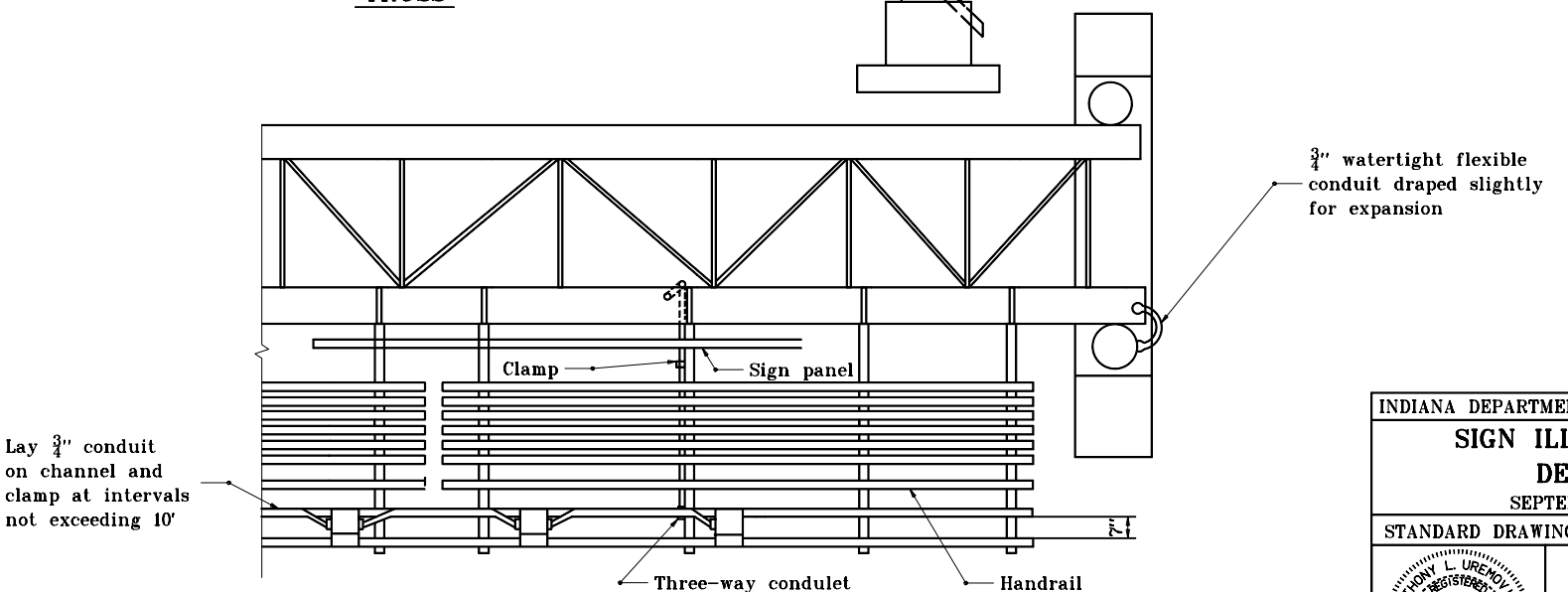

Top View

TRUSS PLAN

INDIANA DEPARTMENT OF TRANSPORTATION

SIGN ILLUMINATION DEATILS

SEPTEMBER 2001

STANDARD DRAWING NO. **E 802-SNIL-03**

ANTHONY L. UREMOVICH REGISTERED No. 18095 STATE OF INDIANA PROFESSIONAL ENGINEER

DESIGN STANDARDS ENGINEER

/s/ Anthony L. Uremovich 9-04-01
DESIGN STANDARDS ENGINEER DATE

/s/ Firooz Zandi 9-04-01
CHIEF HIGHWAY ENGINEER DATE