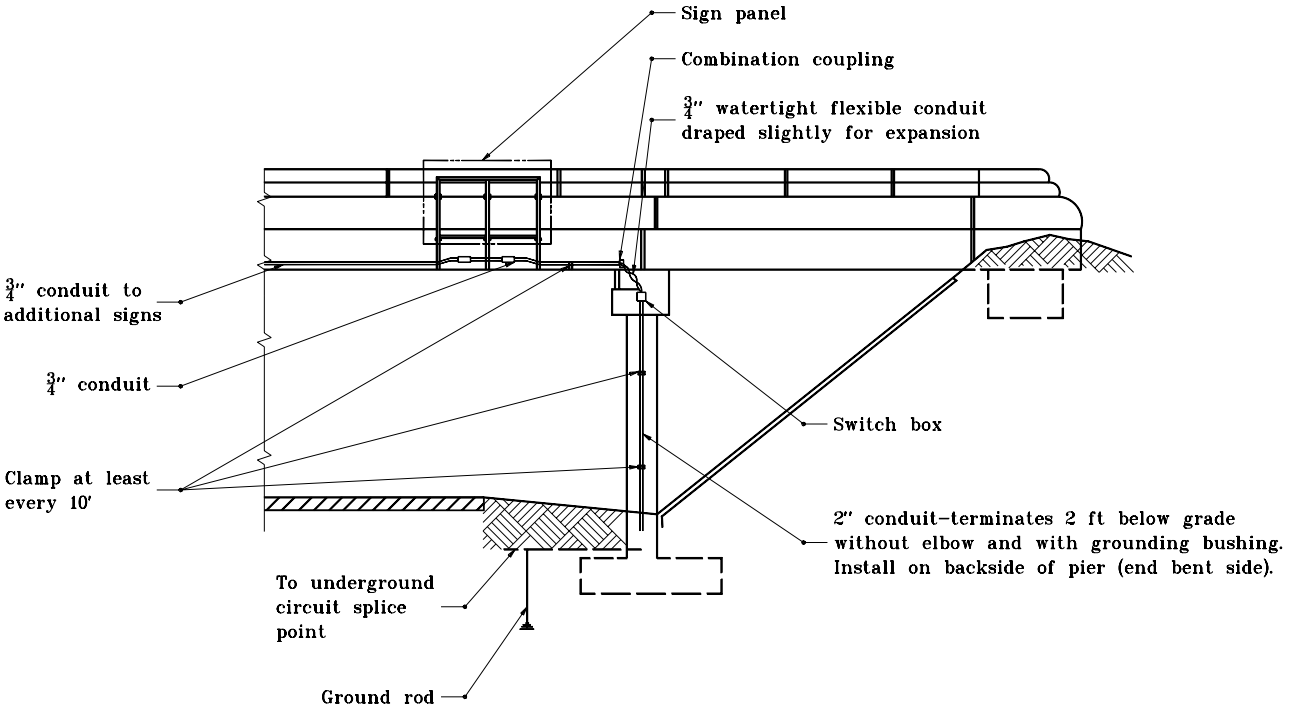

BRIDGE A

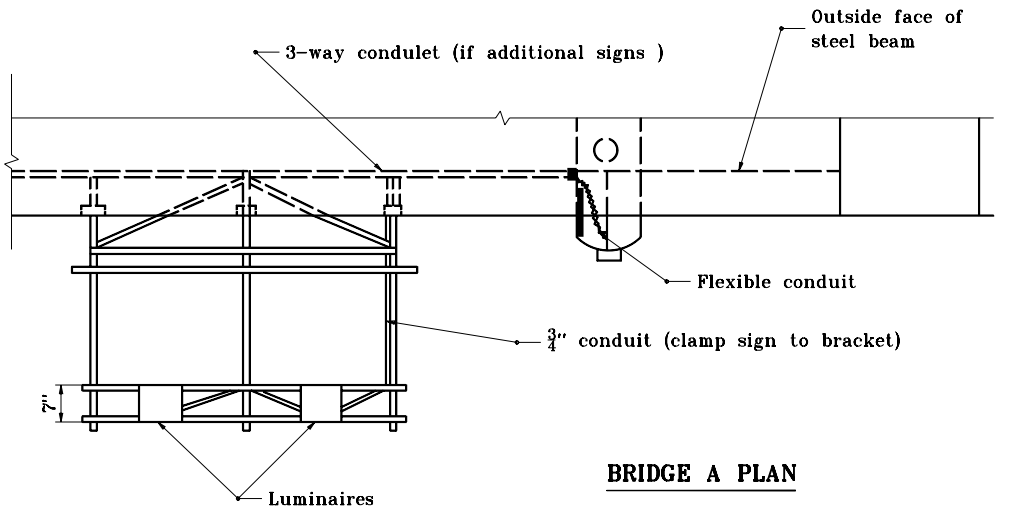

BRIDGE A PLAN

INDIANA DEPARTMENT OF TRANSPORTATION

SIGN ILLUMINATION DETAILS

SEPTEMBER 2001

STANDARD DRAWING NO. **E 802-SNIL-01**

ANTHONY L. UREMOVICH REGISTERED No. 18095 STATE OF INDIANA PROFESSIONAL ENGINEER

DESIGN STANDARDS ENGINEER

/s/ Anthony L. Uremovich 9-04-01
DESIGN STANDARDS ENGINEER DATE

/s/ Firooz Zandi 9-04-01
CHIEF HIGHWAY ENGINEER DATE