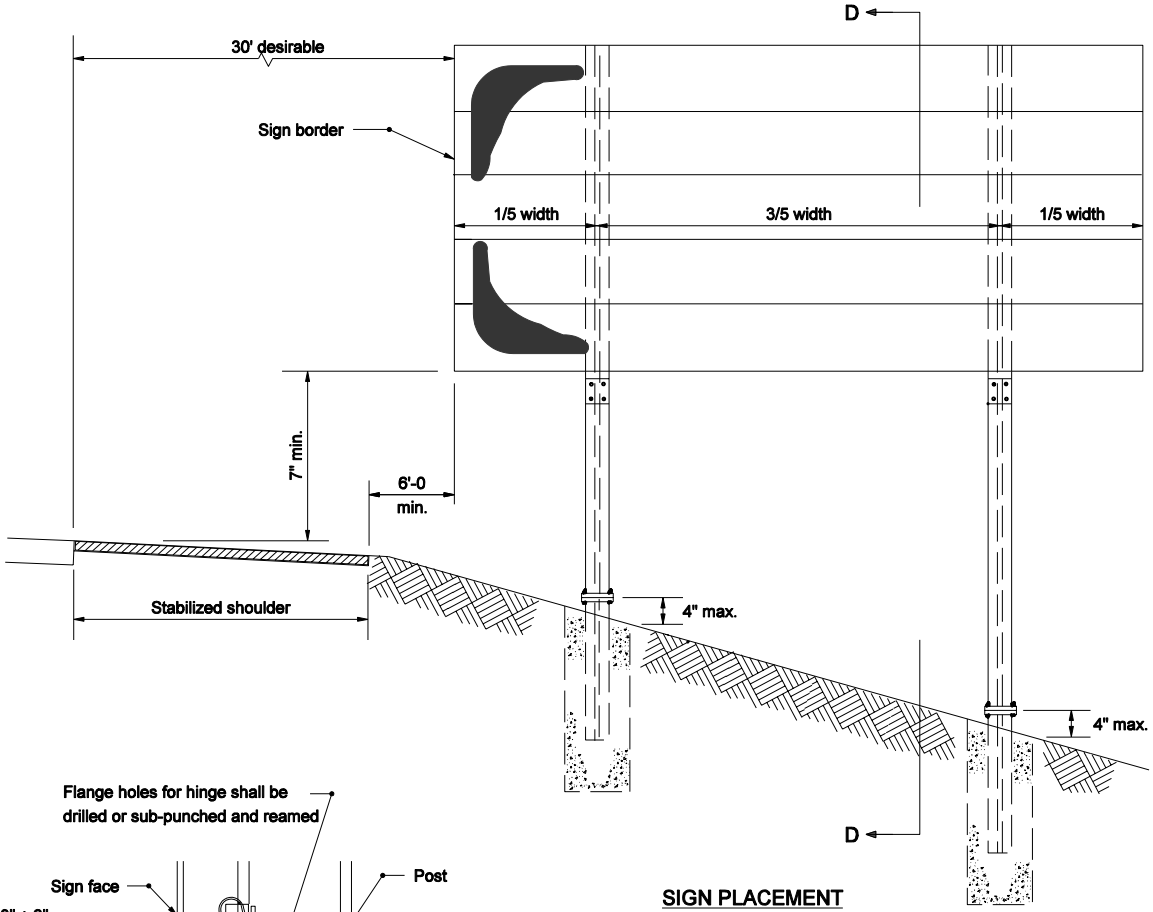

SIGN PLACEMENT

Double Support Sign (Large)

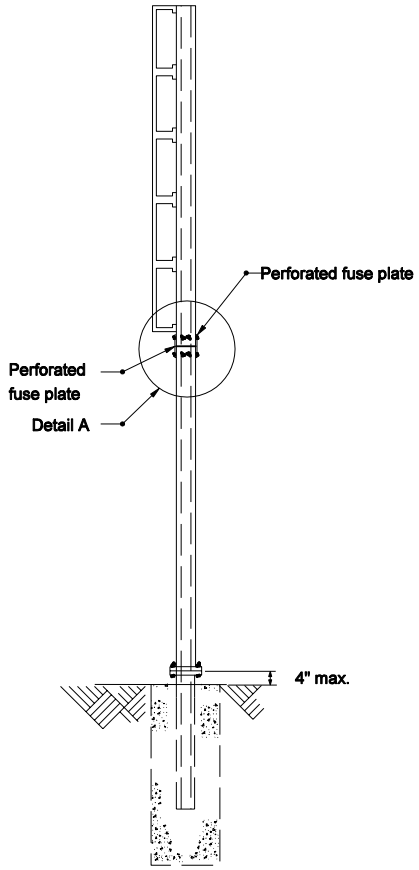

SECTION D-D

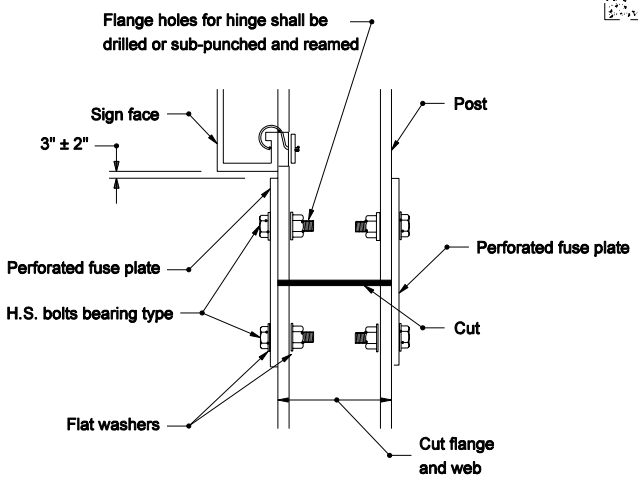

DETAIL A

NOTES:

1. No more than one W10 x 19 or larger post can be used in a 7 ft. path. No more than two W8 x 18 or smaller posts can be used in a 7 ft. path.
2. For 3 post installation, the edge of sign to post is 1/6 width of sign and 1/3 width of sign between posts.
3. See E 802-SNGP-04 for base plate details.

INDIANA DEPARTMENT OF TRANSPORTATION

SIGN PLACEMENT

MARCH 2004

STANDARD DRAWING NO. E 802-SNGP-01

RICHARD L. VanCLEAVE REGISTERED No. 9750 STATE OF INDIANA PROFESSIONAL ENGINEER

DESIGN STANDARDS ENGINEER

/s/ Richard L. VanCleave 3-01-04
DESIGN STANDARDS ENGINEER DATE

/s/ Richard K. Smutzer 3-01-04
CHIEF HIGHWAY ENGINEER DATE