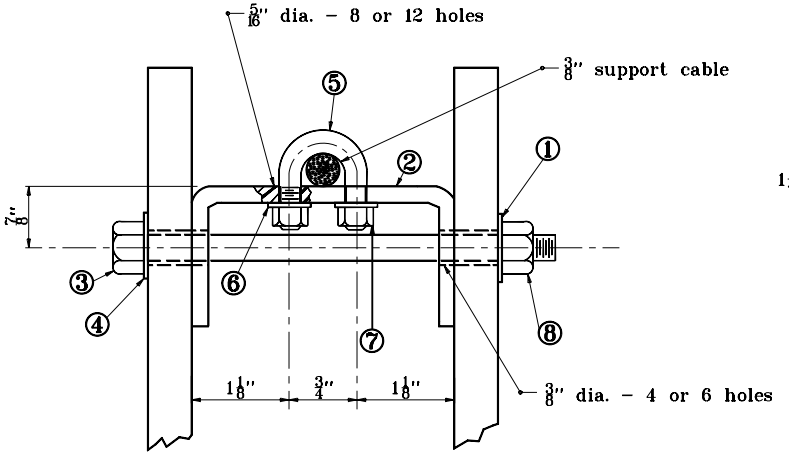

DETAIL A

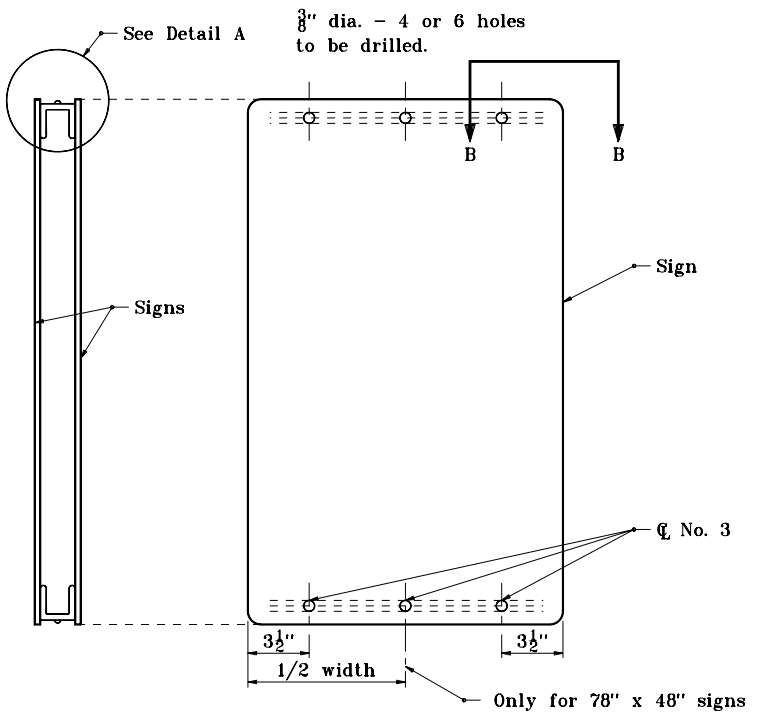

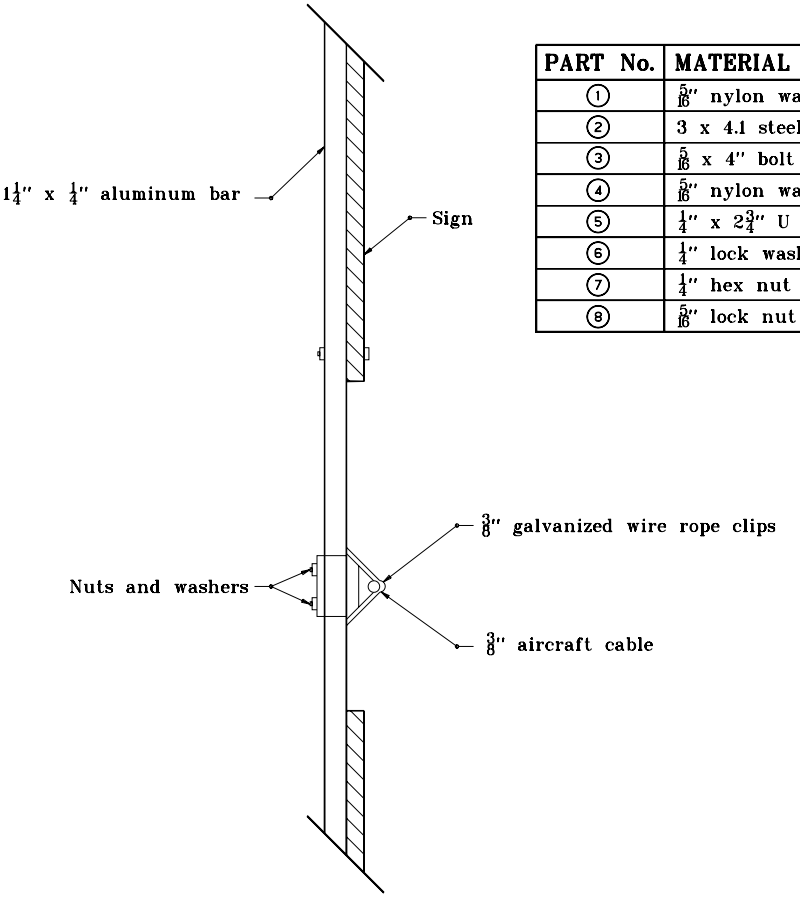

DETAIL B

PART No.	MATERIAL DESCRIPTION
①	5/16" nylon washer
②	3 x 4.1 steel channel
③	5/16 x 4" bolt
④	5/16" nylon washer
⑤	1/4" x 2 3/4" U bolt
⑥	1/4" lock washer
⑦	1/4" hex nut
⑧	5/16" lock nut

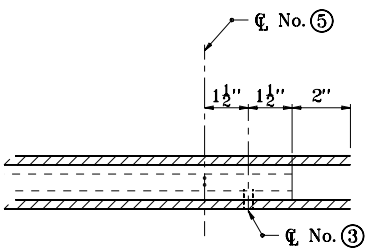

B–B TOP VIEW

INDIANA DEPARTMENT OF TRANSPORTATION

CABLE SPAN SIGN STRUCTURE DETAILS

SEPTEMBER 2001

STANDARD DRAWING NO. E 802–SNCS–03

ANTHONY L. UREMOVICH REGISTERED No. 18095 STATE OF INDIANA PROFESSIONAL ENGINEER

DESIGN STANDARDS ENGINEER

/s/ Anthony L. Uremovich 9–04–01
DESIGN STANDARDS ENGINEER DATE

/s/ Firooz Zandi 9–04–01
CHIEF HIGHWAY ENGINEER DATE