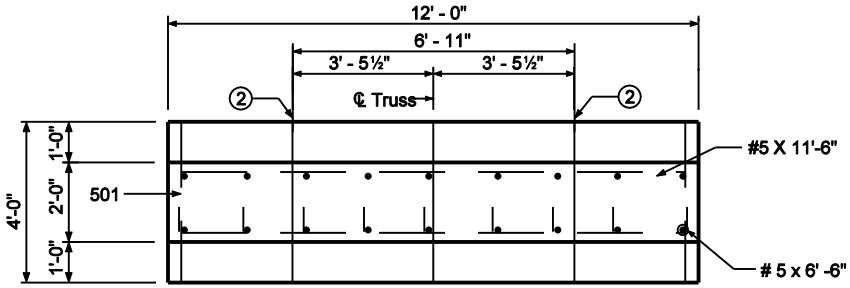

PLAN

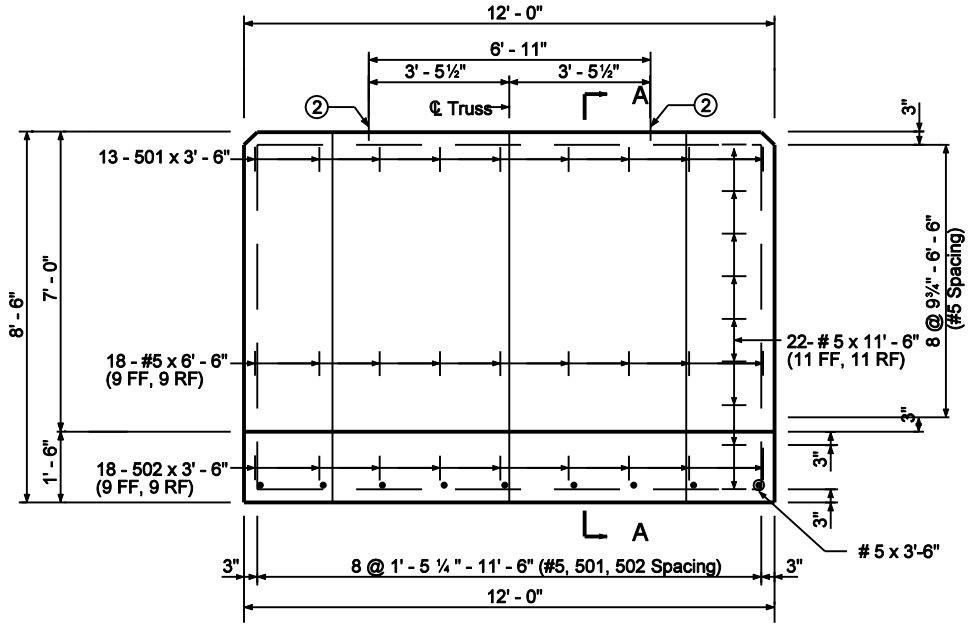

ELEVATION

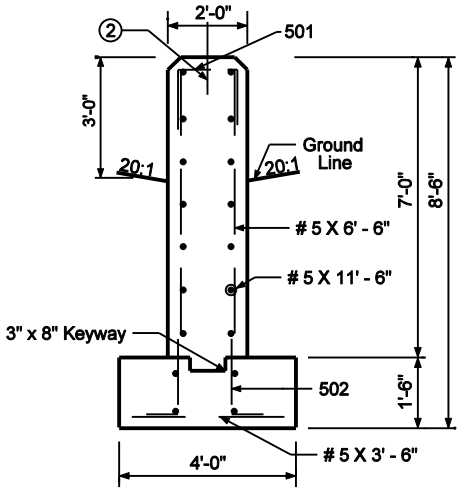

SECTION A-A

Notes:

1. For barrier wall width transition see Standard Drawing E 602-CCMB-03.

② ℄ Anchor Bolt.

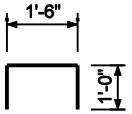

501 x 3'-6"

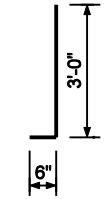

502 x 3'-6"

INDIANA DEPARTMENT OF TRANSPORTATION

BOX TRUSS SIGN FOUNDATION FOR GRASS MEDIAN INSTALLATION

TYPE V- D

MARCH 2003

STANDARD DRAWING NO. E 802-SNBF-02

RICHARD L. VanCLEAVE REGISTERED No. 9750 STATE OF INDIANA PROFESSIONAL ENGINEER

DESIGN STANDARDS ENGINEER

/s/ Richard L. VanCleave 3-03-03
DESIGN STANDARDS ENGINEER DATE

/s/ Richard K. Smutzer 3-03-03
CHIEF HIGHWAY ENGINEER DATE