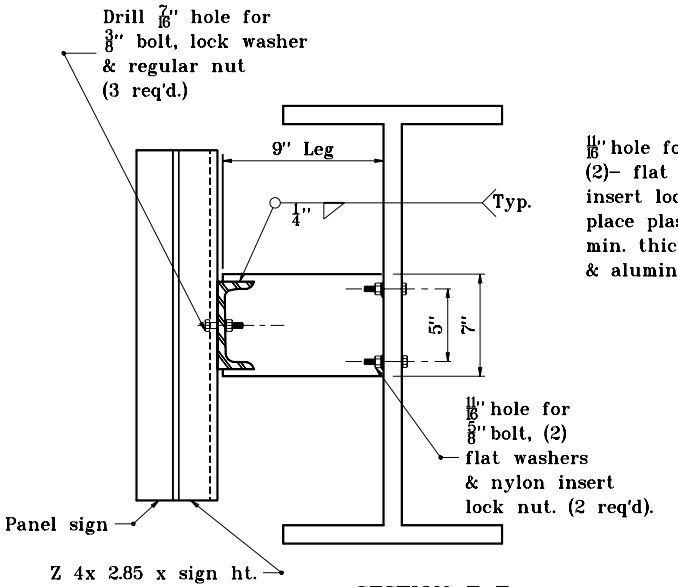

SECTION E–E

11/16" hole for 5/8" Bolt
(2)– flat washers & nylon
insert lock nut. (4)– reqd.
place plastic material, 1/16"
min. thickness between steel
& aluminum surfaces.

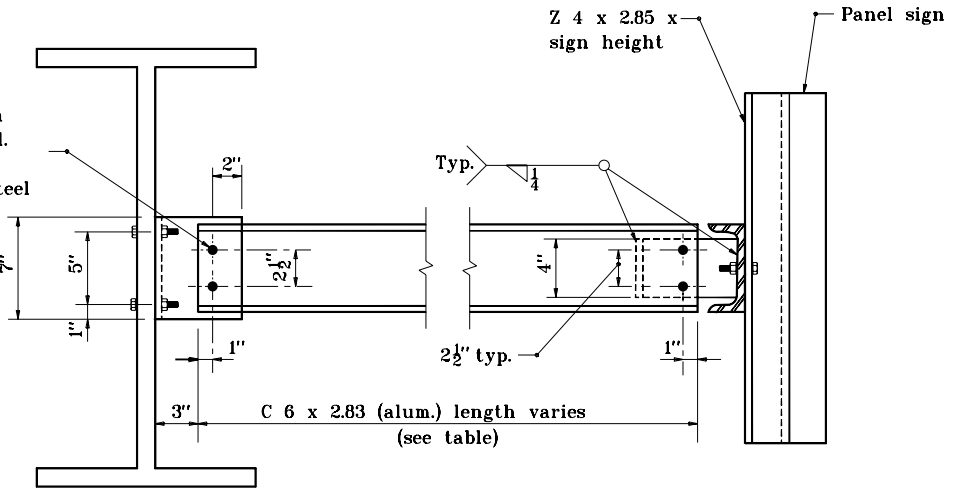

SECTION F–F

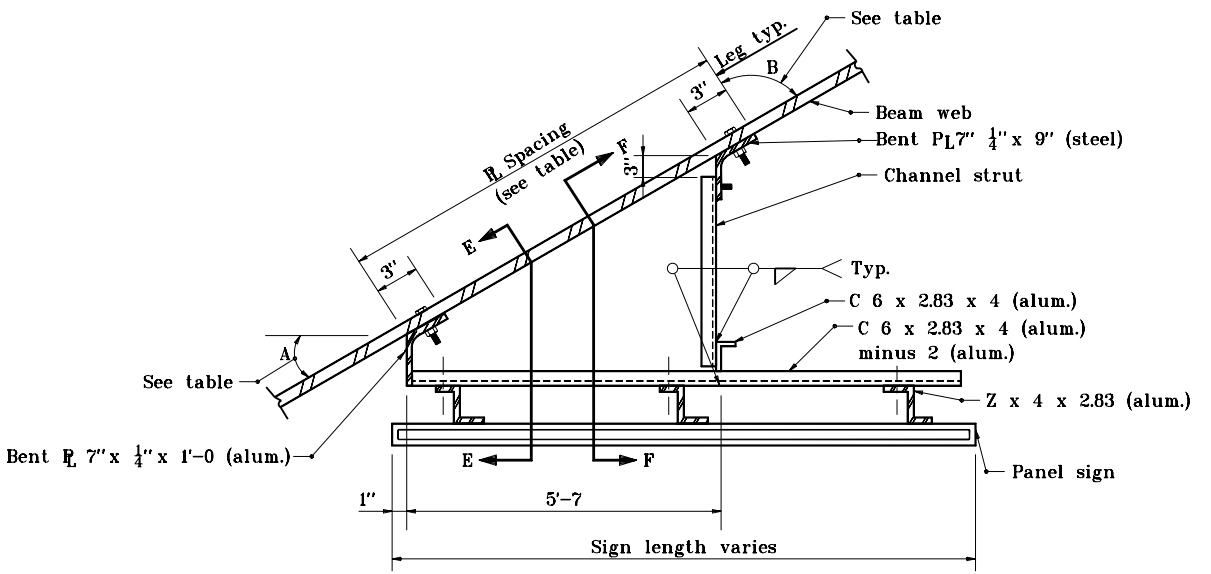

PLAN (TYPE B)

10°, 20°, 30°, & 40° Connections

INDIANA DEPARTMENT OF TRANSPORTATION

BRIDGE BRACKET ASSY. FOR CROSSROAD SIGNING

SEPTEMBER 2001

STANDARD DRAWING NO. E 802-SNBB-04

ANTHONY L. UREMOVICH REGISTERED No. 18095 STATE OF INDIANA PROFESSIONAL ENGINEER

DESIGN STANDARDS ENGINEER

/s/ Anthony L. Uremovich 9-04-01
DESIGN STANDARDS ENGINEER DATE

/s/ Firooz Zandi 9-04-01
CHIEF HIGHWAY ENGINEER DATE