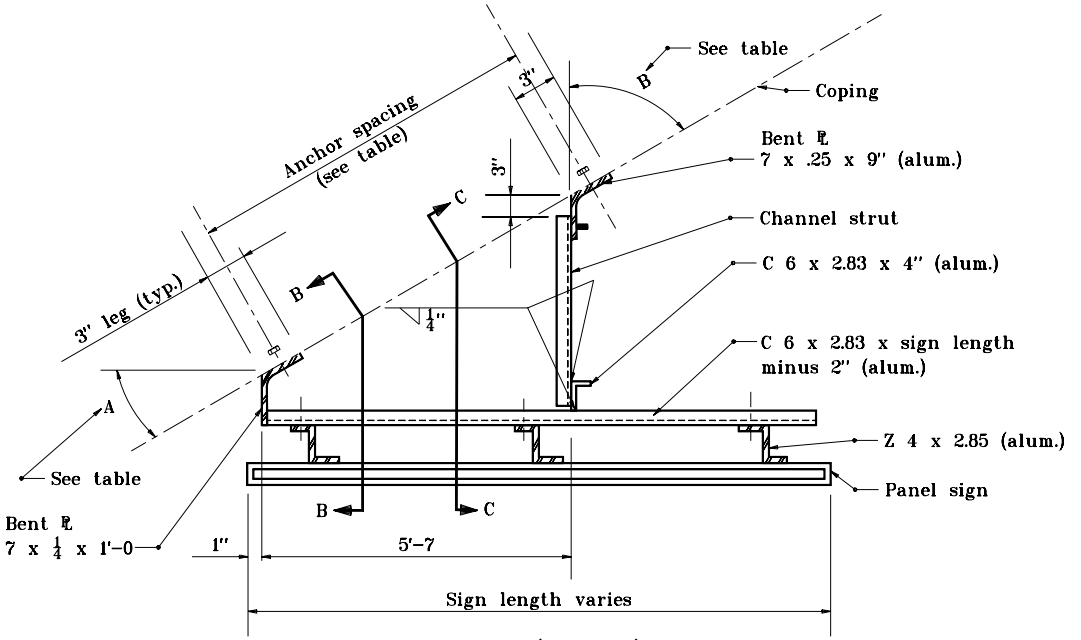

PLAN (TYPE A)

10°, 20°, 30°, & 40° CONNECTIONS

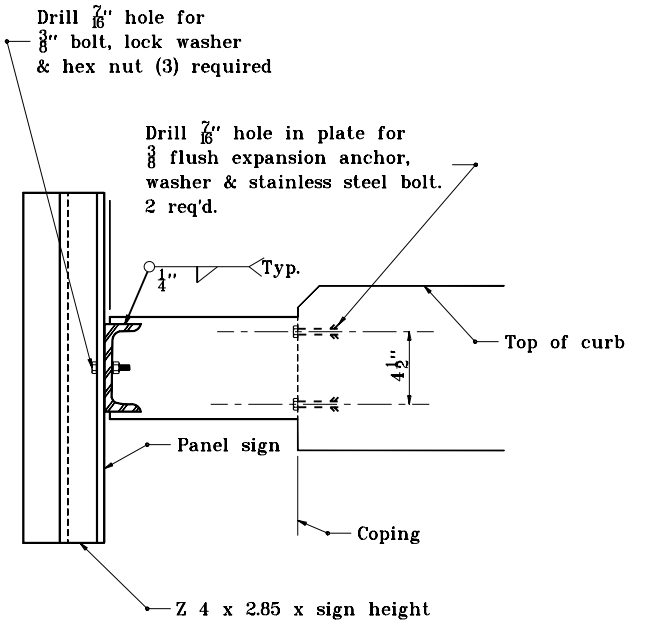

SECTION B–B

GENERAL NOTES

(1) See Standard Drawing E 802-SNBB-05 for table.

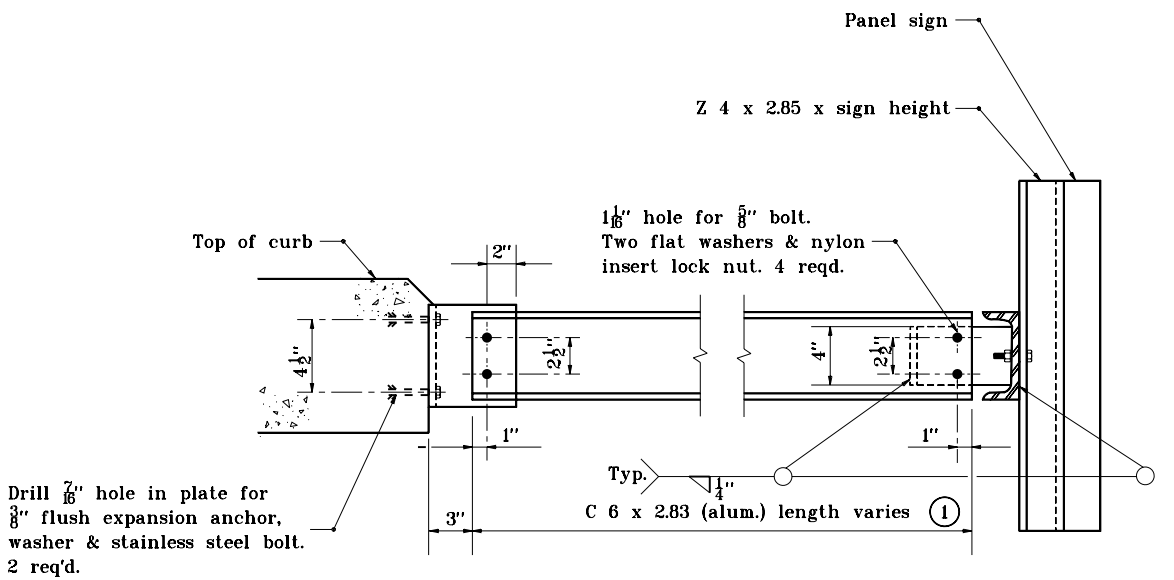

SECTION C–C

INDIANA DEPARTMENT OF TRANSPORTATION

BRIDGE BRACKET ASSY. FOR CROSSROAD SIGNING

SEPTEMBER 2001

STANDARD DRAWING NO. **E 802-SNBB-02**

ANTHONY L. UREMOVICH REGISTERED No. 18095 STATE OF INDIANA PROFESSIONAL ENGINEER

DESIGN STANDARDS ENGINEER

/s/ Anthony L. Uremovich — DESIGN STANDARDS ENGINEER — 9-04-01 DATE

/s/ Firooz Zandi — CHIEF HIGHWAY ENGINEER — 9-04-01 DATE