GENERAL NOTES

1. All lanes are to be open after daylight working hours.
2. See Standard Drawing E 801-TCLG-01 for standard notes and legend.

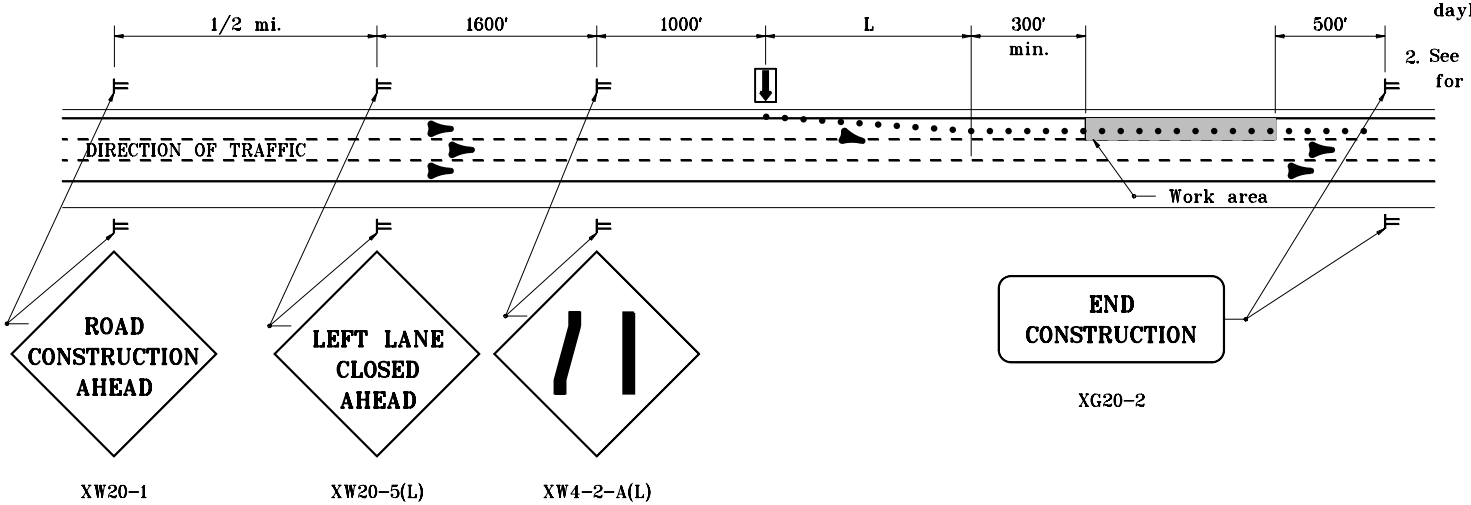

TYPICAL APPLICATION ON 6 - LANE DIVIDED HIGHWAY WHERE LEFT LANE IS CLOSED

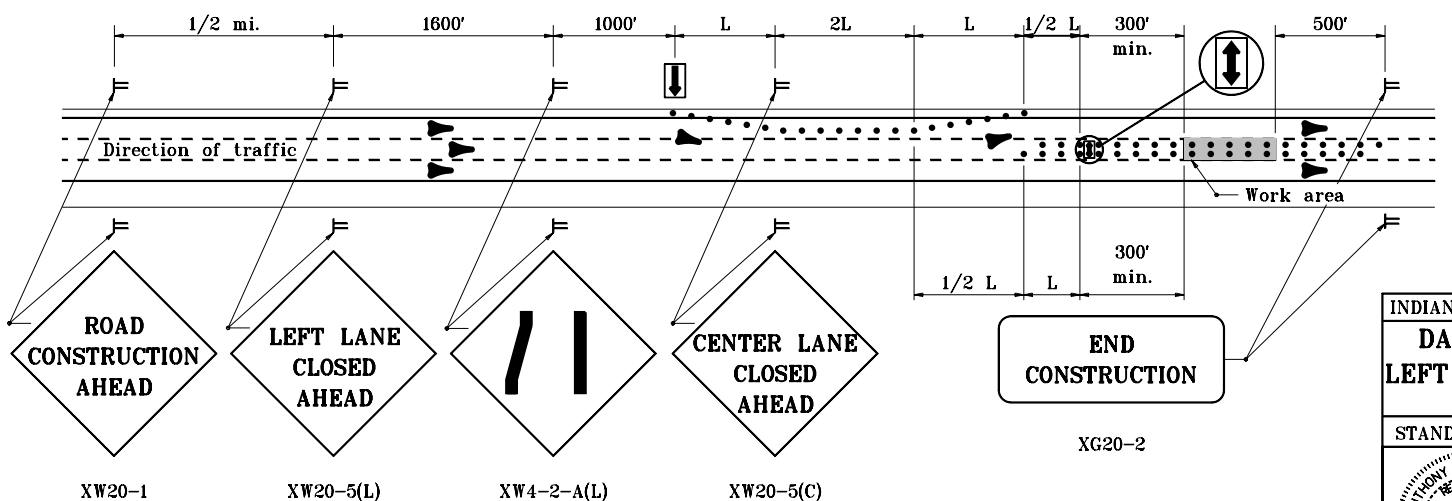

TYPICAL APPLICATION ON 6 - LANE DIVIDED HIGHWAY WHERE CENTER LANE IS CLOSED

INDIANA DEPARTMENT OF TRANSPORTATION

DAYLIGHT LANE CLOSURES
LEFT OR CENTER LANE CLOSED

MAY 1997

STANDARD DRAWING NO. **E 801-TCLC-06**

ANTHONY L. UREMOVICH REGISTERED No. 18095 STATE OF INDIANA PROFESSIONAL ENGINEER

DESIGN STANDARDS ENGINEER

DETAILS PLACED IN THIS FORMAT	11-15-99
/s/ Anthony L. Uremovich DESIGN STANDARDS ENGINEER	11-15-99 DATE
/s/ Firooz Zandi CHIEF HIGHWAY ENGINEER	11-15-99 DATE
ORIGINALLY APPROVED	5-01-97