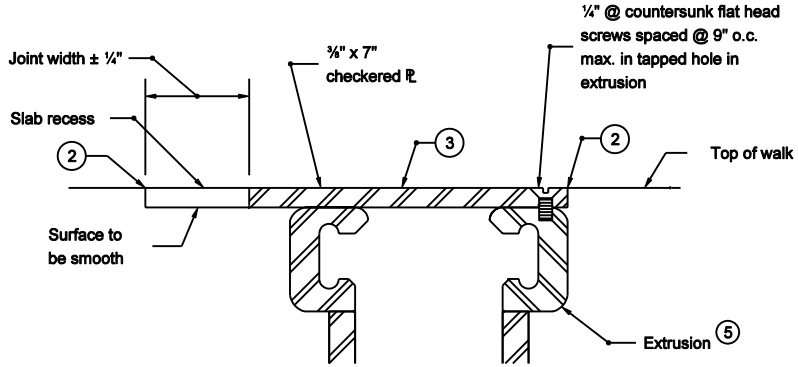

SECTION H-H

SLIDING COVER PLATE DETAIL

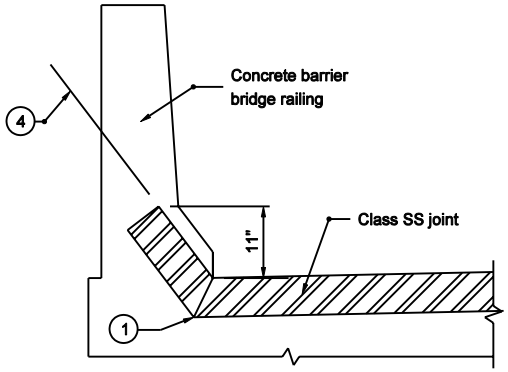

SECTION A-A

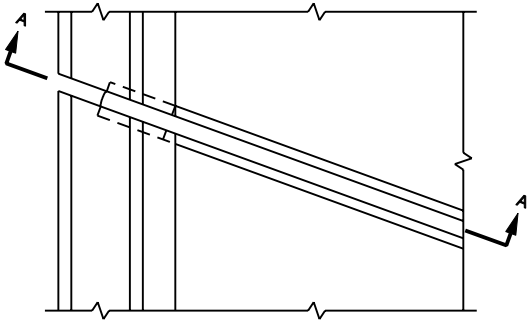

PLAN

CONCRETE BARRIER BRIDGE RAILING

1. The extrusion and plate assemblies with anchors shall be miter cut and shop spliced at this location. A miter cut, vulcanized shop splice will be required in the strip seal at this location.
2. Tool concrete edges to ¼" to ⅜" radius.
3. The length of the sliding cover plate, measured along the centerline of the Class SS Joint, shall be ⅜" shorter at each end than the limits of the recess as shown on these details.
4. The joint shall be placed parallel to the lower sloped face of the rail with a maximum 3 " depth to the top of the extrusion.
5. See Standard Drawings E 724-BSSJ-03 and -04 for details.

INDIANA DEPARTMENT OF TRANSPORTATION

EXPANSION JOINTS
CLASS SS

SEPTEMBER 2003

STANDARD DRAWING NO. E 724-BSSJ-08

RICHARD L. VanCLEAVE
REGISTERED
No. 9750
STATE OF
INDIANA
PROFESSIONAL ENGINEER

DESIGN STANDARDS ENGINEER

/s/ Richard L. VanCleave 9-02-03
DESIGN STANDARDS ENGINEER DATE

/s/ Richard K. Smutzer 9-02-03
CHIEF HIGHWAY ENGINEER DATE