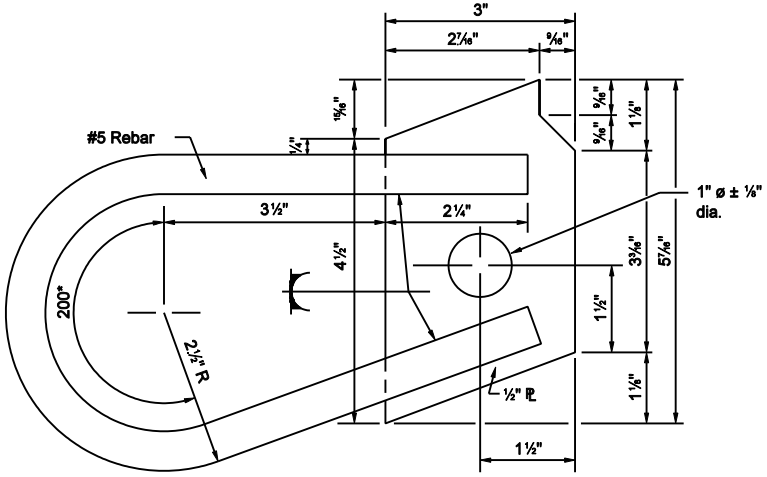

ANCHOR PLATE ALTERNATE B-1

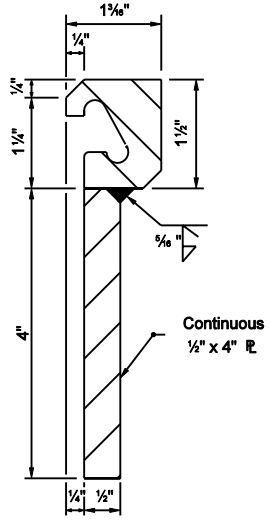

EXTRUSION & PLATE ASSEMBLY DETAIL

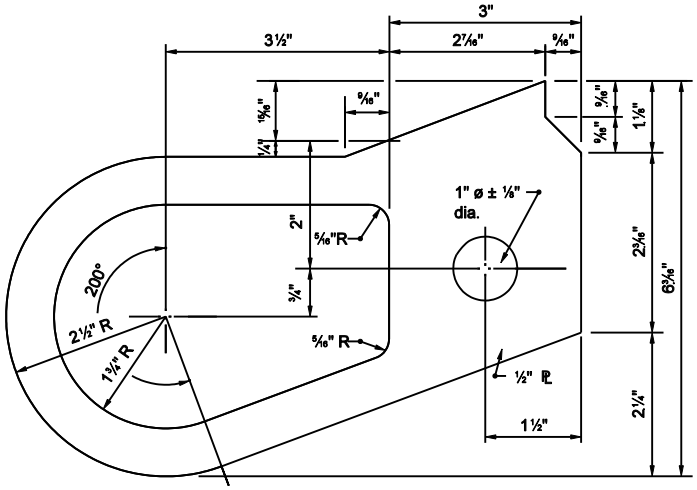

ANCHOR PLATE ALTERNATE B-2

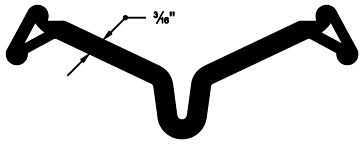

STRIP SEAL

INDIANA DEPARTMENT OF TRANSPORTATION

EXPANSION JOINTS CLASS SS (ALTERNATE B)

SEPTEMBER 2003

STANDARD DRAWING NO. E 724-BSSJ -02

RICHARD L. VanCLEAVE REGISTERED No. 9750 STATE OF INDIANA PROFESSIONAL ENGINEER

DESIGN STANDARDS ENGINEER

/s/ Richard L. VanCleave 9-02-03
DESIGN STANDARDS ENGINEER DATE

/s/ Richard K. Smutzer 9-02-03
CHIEF HIGHWAY ENGINEER DATE