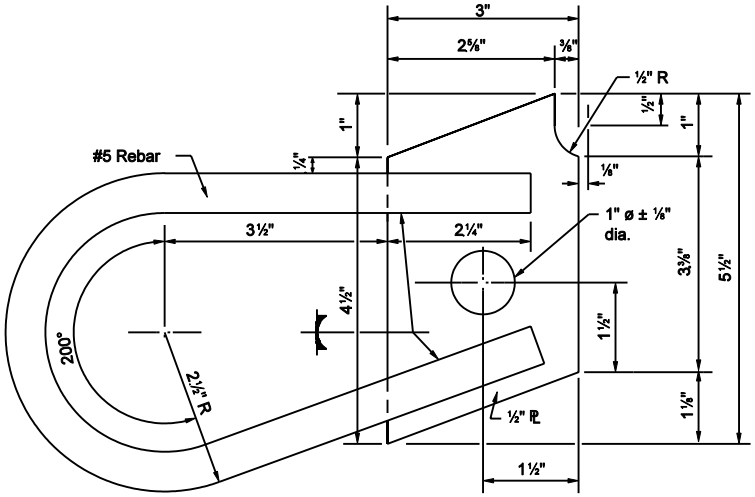

ANCHOR PLATE ALTERNATE A-1

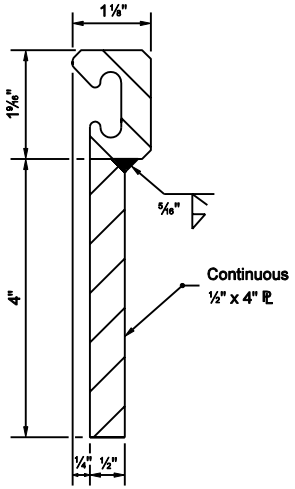

EXTRUSION & PLATE
ASSEMBLY DETAIL

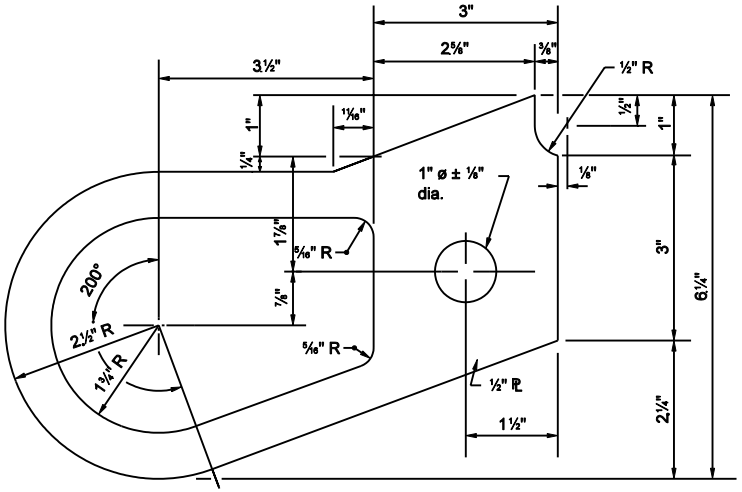

ANCHOR PLATE ALTERNATE A-2

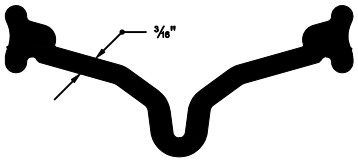

STRIP SEAL

INDIANA DEPARTMENT OF TRANSPORTATION

EXPANSION JOINTS
CLASS SS (ALTERNATE A)

SEPTEMBER 2003

STANDARD DRAWING NO. E 724-BSSJ -01

RICHARD L. VanCLEAVE
REGISTERED
No. 9750
STATE OF INDIANA
PROFESSIONAL ENGINEER

DESIGN STANDARDS ENGINEER

/s/ Richard L. VanCleave 9-02-03
DESIGN STANDARDS ENGINEER DATE

/s/ Richard K. Smutzer 9-02-03
CHIEF HIGHWAY ENGINEER DATE