GENERAL NOTES

1. Expansion material in joints is preformed joint filler. Copper flashing is to be lapped 2 in. and soldered, subject to approval.

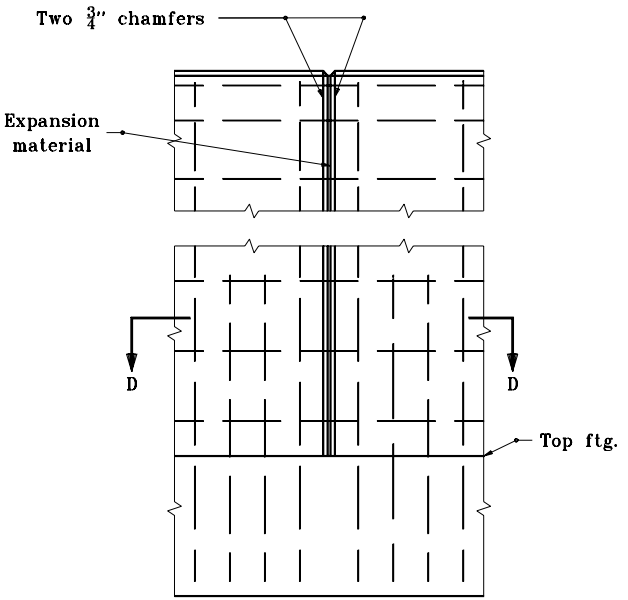

FRONT FACE

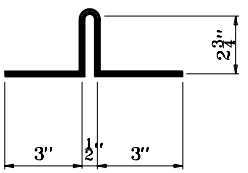

BENDING DIAGRAM FOR COPPER FLASHING

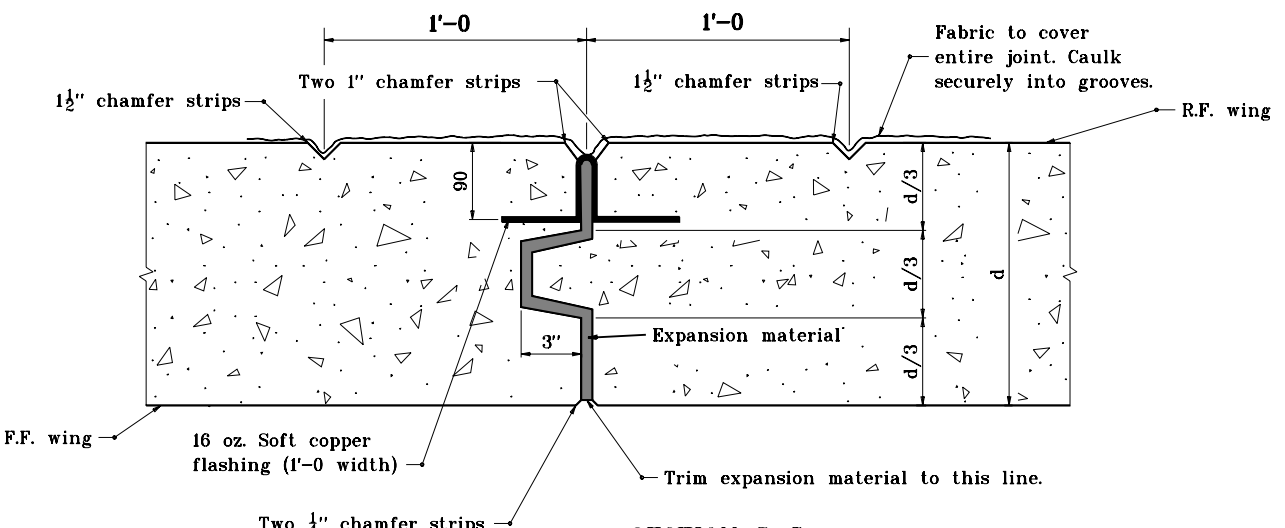

SECTION D-D

INDIANA DEPARTMENT OF TRANSPORTATION

EXPANSION JOINT TYPICAL DETAILS

SEPTEMBER 1994

STANDARD DRAWING NO. **E 724-BJTS-03**

ANTHONY L. UREMOVICH REGISTERED No. 18095 STATE OF INDIANA PROFESSIONAL ENGINEER

DESIGN STANDARDS ENGINEER

DETAILS PLACED IN THIS FORMAT	11-15-99
/s/ Anthony L. Uremovich DESIGN STANDARDS ENGINEER	11-15-99 DATE
/s/ Firooz Zandi CHIEF HIGHWAY ENGINEER	11-15-99 DATE
ORIGINALLY APPROVED	9/30/94