GENERAL NOTES

1. Casting total weight 235 lbs.
2. Casting finish: no paint.

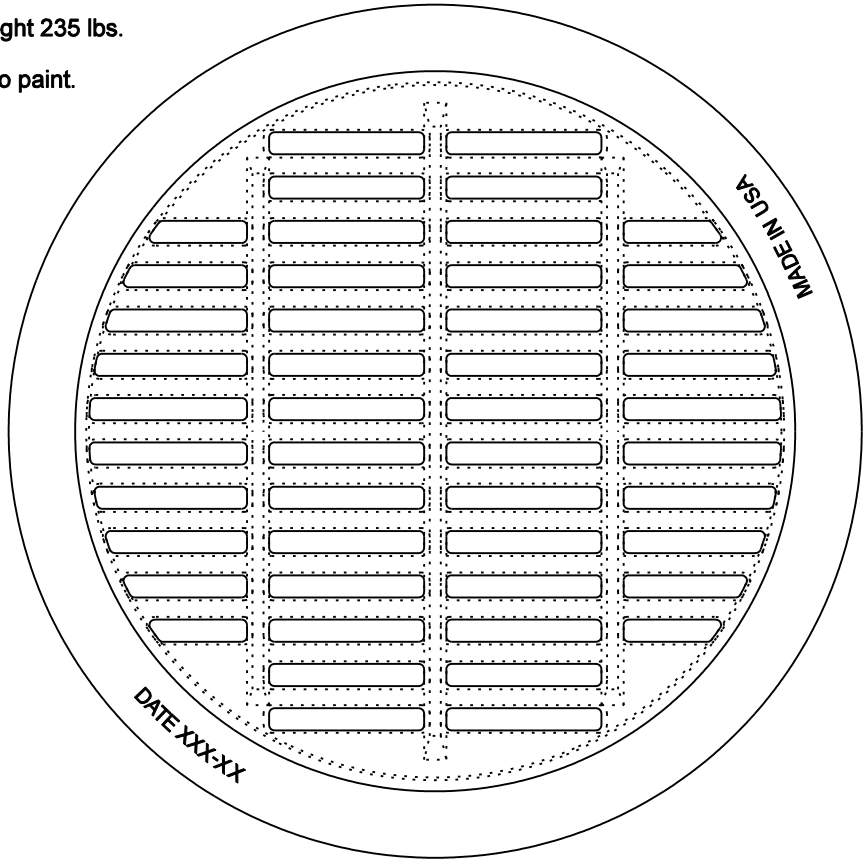

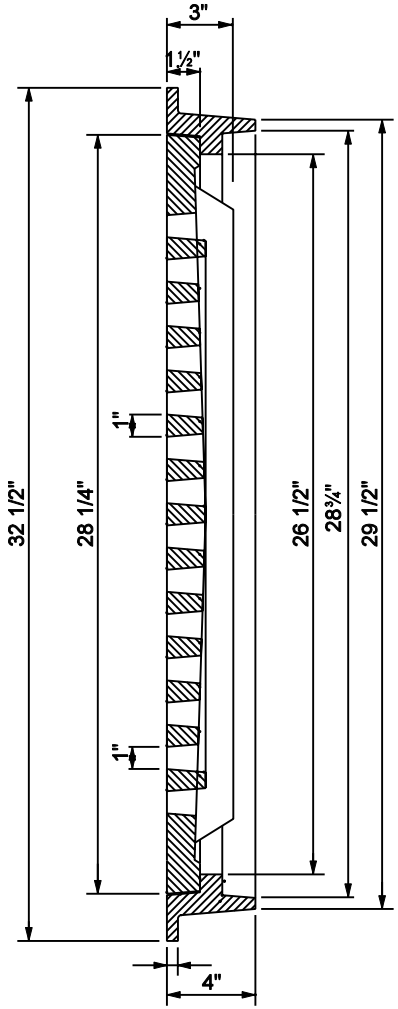

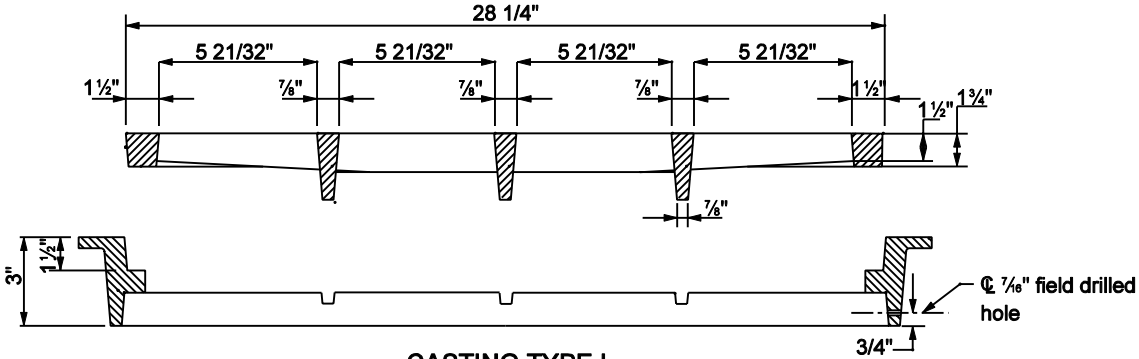

CASTING TYPE I

INDIANA DEPARTMENT OF TRANSPORTATION

CASTING TYPE I
FRAME AND GRATE

MARCH 2003

STANDARD DRAWING NO. E 720-SDCP-02

RICHARD L. VanCLEAVE REGISTERED No. 9750 STATE OF INDIANA PROFESSIONAL ENGINEER

DESIGN STANDARDS ENGINEER

/s/ Richard L. VanCleave 3-03-03
DESIGN STANDARDS ENGINEER DATE

/s/ Richard K. Smutzer 3-03-03
CHIEF HIGHWAY ENGINEER DATE