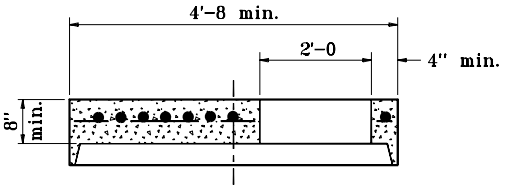

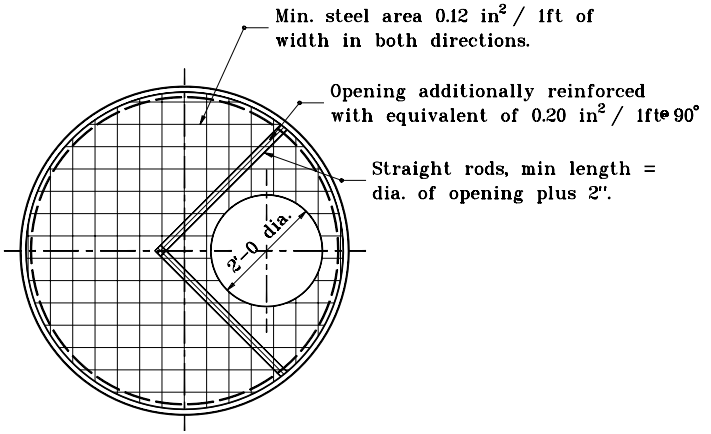

DETAIL A

COVER CAP FOR PRECAST CONCRETE MANHOLE SECTION

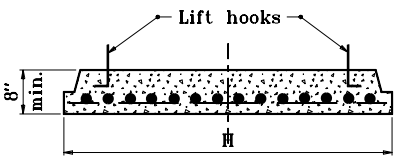

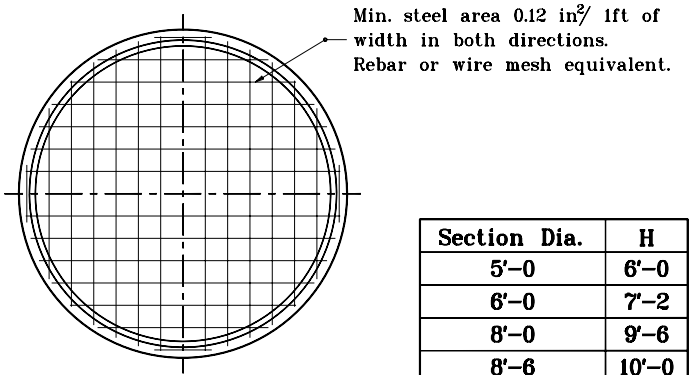

Section Dia.	H
5'-0	6'-0
6'-0	7'-2
8'-0	9'-6
8'-6	10'-0
9'-0	10'-8

DETAIL C

BASE FOR PRECAST CONCRETE MANHOLE SECTIONS (5'-0 to 9'-0 DIA.)

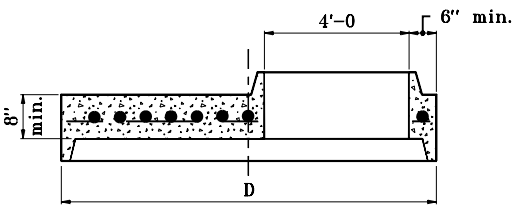

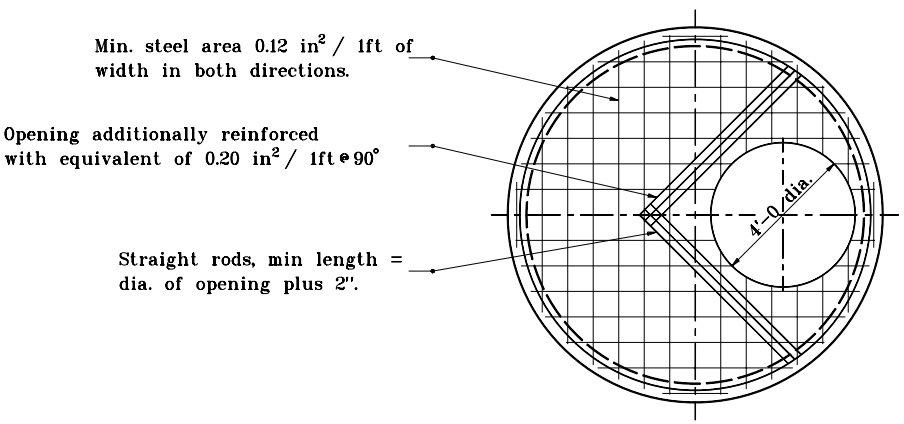

Section Dia.	D
5'-0	6'-0
6'-0	7'-2
8'-0	9'-6
8'-6	10'-0
9'-0	10'-8

DETAIL B

REDUCER CAP FOR PRECAST MANHOLE SECTION (5'-0 to 9'-0 DIA.)

INDIANA DEPARTMENT OF TRANSPORTATION

PRECAST CONCRETE MANHOLE SECTIONS

APRIL 1995

STANDARD DRAWING NO. **E 720-MHST-06**

ANTHONY L. UREMOVICH REGISTERED No. 18095 STATE OF INDIANA PROFESSIONAL ENGINEER

DESIGN STANDARDS ENGINEER

DETAILS PLACED IN THIS FORMAT 11-15-99

/s/ Anthony L. Uremovich 11-15-99
DESIGN STANDARDS ENGINEER DATE

/s/ Firooz Zandi 11-15-99
CHIEF HIGHWAY ENGINEER DATE

ORIGINALLY APPROVED 4-03-95