MANHOLE DIMENSIONS		
TYPE	A-1 PIPE SIZE DIA. (in)	B AND D
D	27 to 42	4'-9
E	48 to 60	6'-6
F	66 to 84	8'-10
G	90 to 108	11'-2

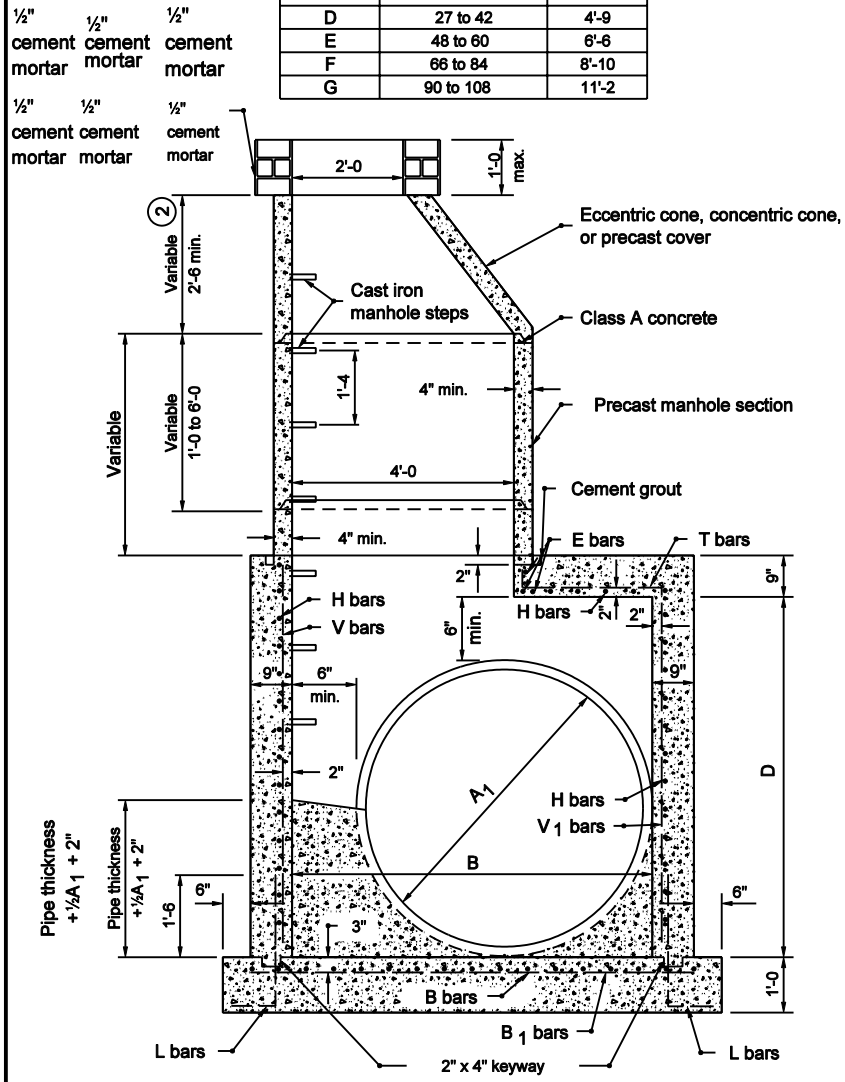

SECTION A-A

NOTES

1. Manhole type H, J, K, L, M, or N, may be substituted for manhole type C, D, E, or F for comparable pipe sizes. See Standard Drawing E 720-MHST-05 for manholes type H, J, K, L, M, and N details.

2. For eccentric and concentric cone heights see Cone Heights Table on Standard Drawing 720-MHST-08.

3. See Standard Drawing 720-MHST-10 for Reinforcing Steel for Manholes table.

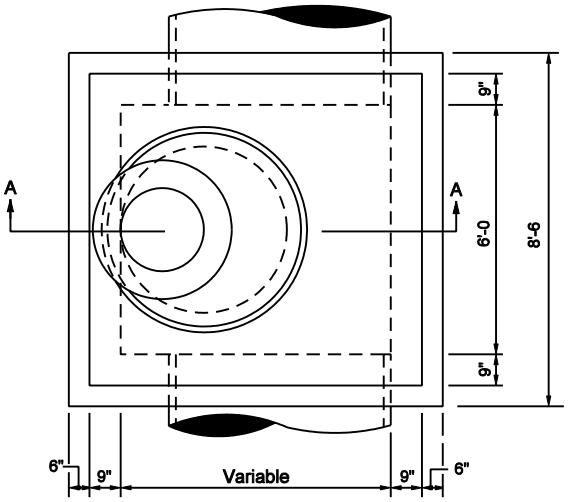

PLAN VIEW

INDIANA DEPARTMENT OF TRANSPORTATION

MANHOLES
TYPE D, E, F, AND G

SEPTEMBER 2003

STANDARD DRAWING NO. E 720-MHST-04

RICHARD L. VanCLEAVE REGISTERED No. 9750 STATE OF INDIANA PROFESSIONAL ENGINEER

DESIGN STANDARDS ENGINEER

/s/ Richard L. VanCleave 9-02-03
DESIGN STANDARDS ENGINEER DATE

/s/ Richard K. Smutzer 9-02-03
CHIEF HIGHWAY ENGINEER DATE