GENERAL NOTES

(1) For eccentric and concentric cone heights see cone heights table on Standard Drawing E 720-MHST-08.

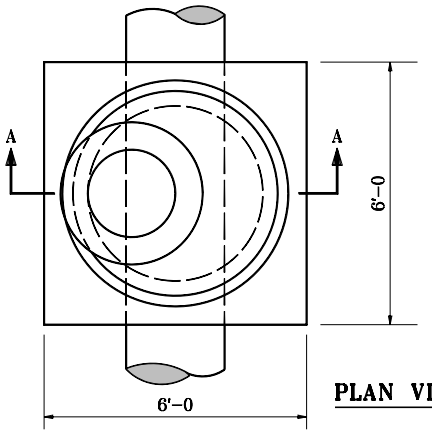

PLAN VIEW

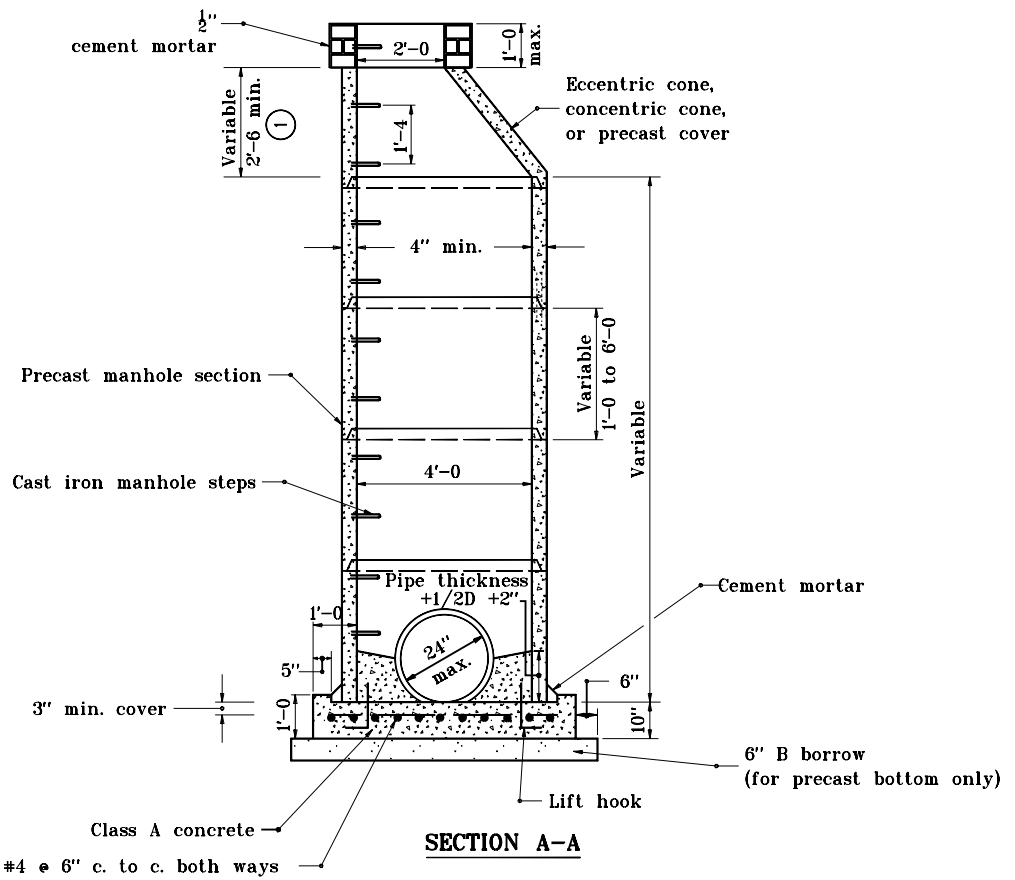

SECTION A-A

INDIANA DEPARTMENT OF TRANSPORTATION		
MANHOLE TYPE C		
SEPTEMBER 1997		
STANDARD DRAWING NO. E 720-MHST-02		
ANTHONY L. UREMOVICH REGISTERED No. 18095 STATE OF INDIANA PROFESSIONAL ENGINEER	DETAILS PLACED IN THIS FORMAT	11-15-99
	/s/ Anthony L. Uremovich DESIGN STANDARDS ENGINEER	11-15-99 DATE
	/s/ Firooz Zandi CHIEF HIGHWAY ENGINEER	11-15-99 DATE
DESIGN STANDARDS ENGINEER	ORIGINALLY APPROVED	9-02-97