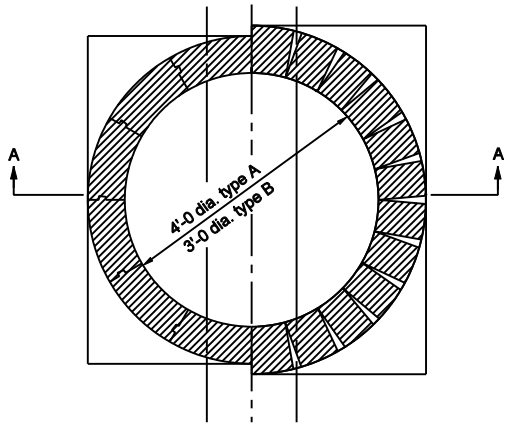

SECTION B-B

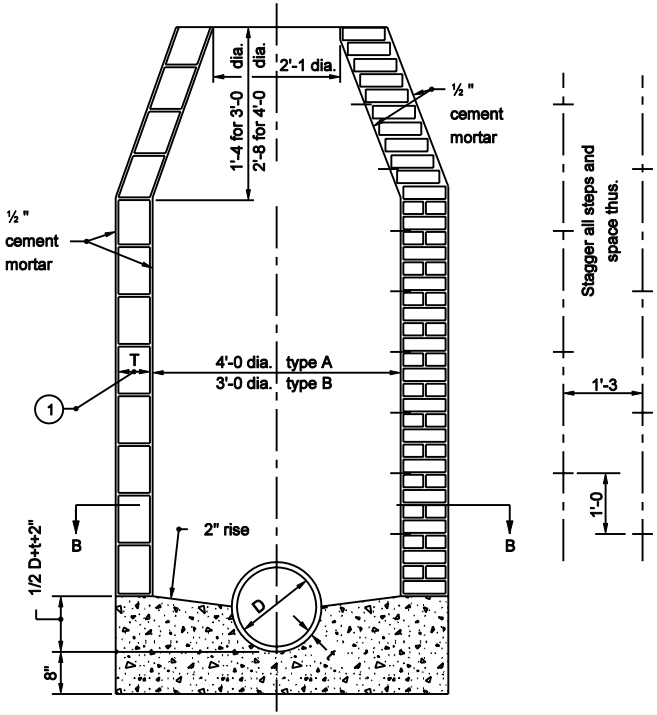

SECTION A-A

TYPE A
Dia. = 4'-0"

TYPE B
Dia. = 3'-0

NOTES

1. T = 8" for brick structure
   T = 6" for segmental block structure

INDIANA DEPARTMENT OF TRANSPORTATION

MANHOLES TYPE A AND B

SEPTEMBER 2003

STANDARD DRAWING NO. E 720-MHST-01

RICHARD L. VanCLEAVE REGISTERED No. 9750 STATE OF INDIANA PROFESSIONAL ENGINEER

DESIGN STANDARDS ENGINEER

/s/ Richard L. VanCleave 9-02-03
DESIGN STANDARDS ENGINEER DATE

/s/ Richard K. Smutzer 9-02-03
CHIEF HIGHWAY ENGINEER DATE