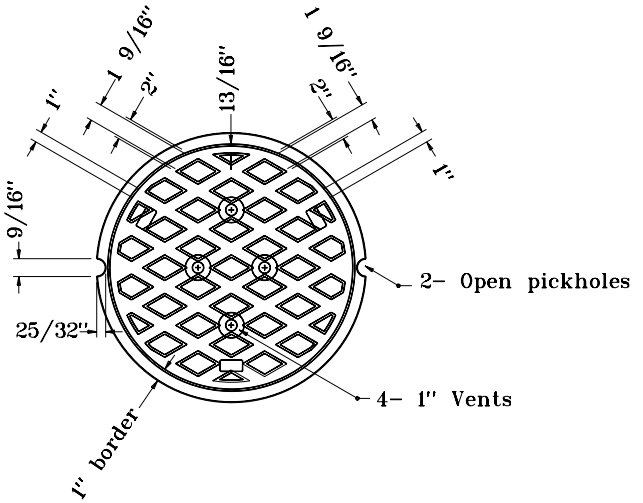

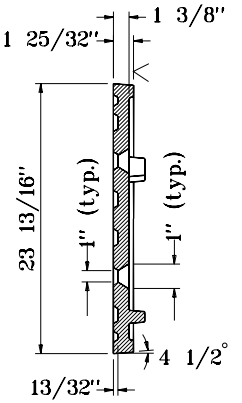

1" dia. anchor bolt holes on a 29 1/8" dia. b.c. 4 reqd.

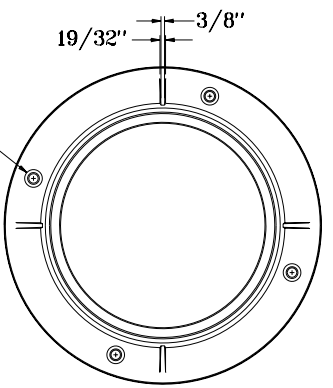

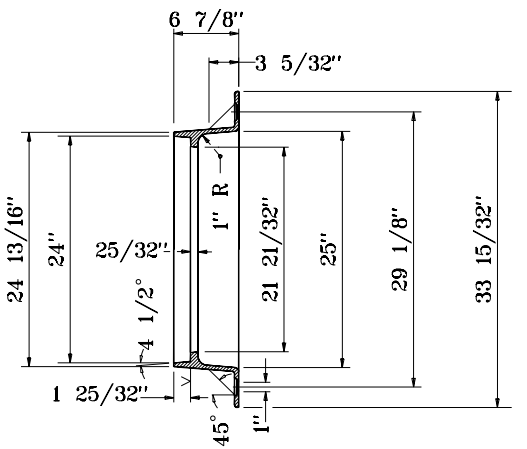

INDIANA DEPARTMENT OF TRANSPORTATION

MANHOLE CASTING
TYPE 4 RING AND COVER

SEPTEMBER 1998

STANDARD DRAWING NO **E 720-MHCA-02**

ANTHONY L. UREMOVICH REGISTERED No. 18095 STATE OF INDIANA PROFESSIONAL ENGINEER

DESIGN STANDARDS ENGINEER

DETAILS PLACED IN THIS FORMAT	11-15-99
/s/ Anthony L. Uremovich DESIGN STANDARDS ENGINEER	11-15-99 DATE
/s/ Firooz Zandi CHIEF HIGHWAY ENGINEER	11-15-99 DATE
ORIGINALLY APPROVED	9-01-98