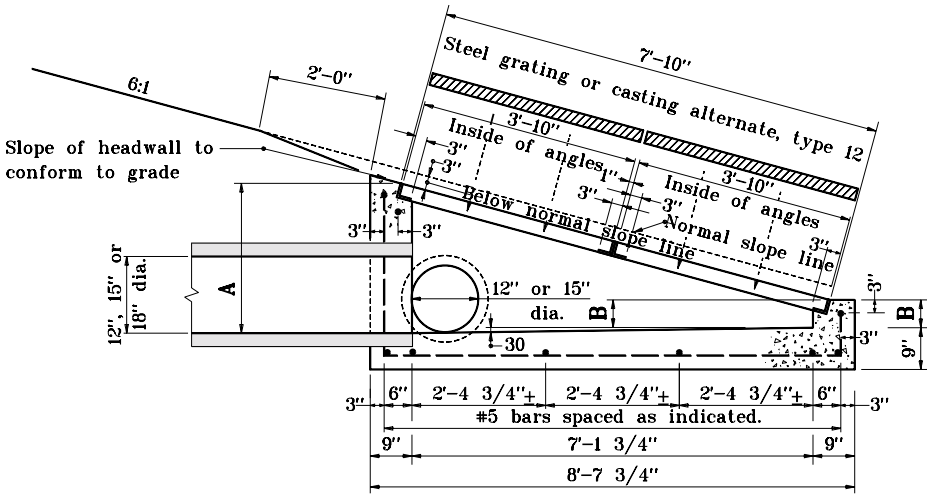

SECTION A-A

Showing Grate Slope of 6:1

TYPE N INLET						
PIPE	6:1		8:1		10:1	
SIZE	A	B	A	B	A	B
12"	21 1/2"	5"	21 1/2"	8 7/8"	21 1/2"	11 1/8"
15"	24 3/4"	8 1/4"	24 3/4"	12 1/8"	24 3/4"	14 3/8"
18"	28"	11 1/2"	28"	15 3/8"	28"	17 5/8"

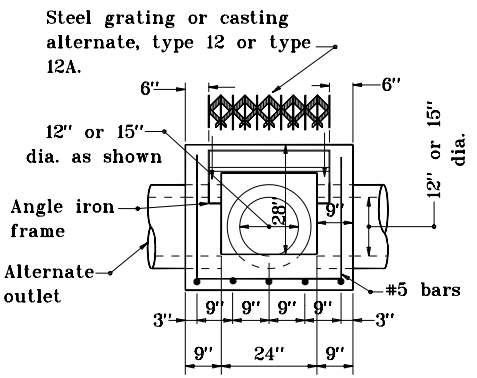

SECTION B-B

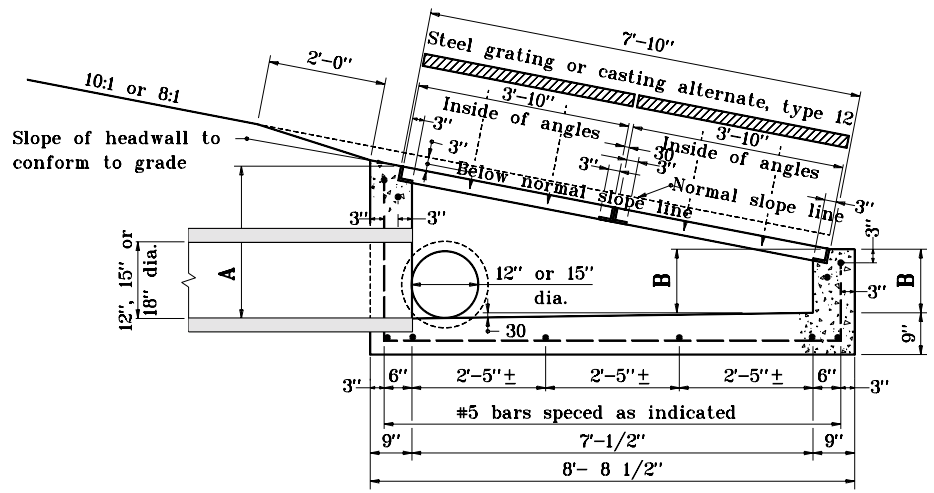

SECTION A-A

Showing Grate Slope of 8:1 or 10:1

INDIANA DEPARTMENT OF TRANSPORTATION

INLET TYPE N

MAY 1998

STANDARD DRAWING NO. **E 720-INST-08**

ANTHONY L. UREMOVICH REGISTERED No. 18095 STATE OF INDIANA PROFESSIONAL ENGINEER

DESIGN STANDARDS ENGINEER

DETAILS PLACED IN THIS FORMAT 11-15-99

/s/ Anthony L. Uremovich 11-15-99
DESIGN STANDARDS ENGINEER DATE

/s/ Firooz Zandi 11-15-99
CHIEF HIGHWAY ENGINEER DATE

ORIGINALLY APPROVED 5-01-98