GENERAL NOTES

1. If inlet pipe is required, A_1 and B_1 shall be increased or decreased 1'-0 as directed.
2. 2" dia. pipe drain from bottom of curb to inlet. Aggregate to be placed around inlet end of pipe.
3. 3" min. dia. pipe to be kept open for drainage of subgrade or base until surface is placed.

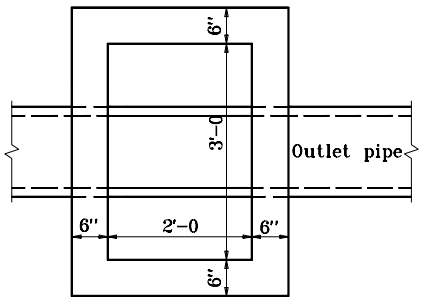

PLAN

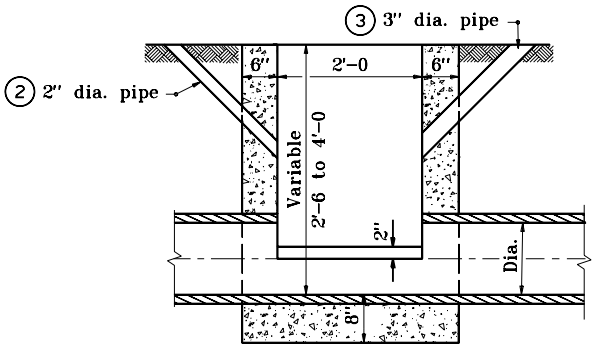

SECTION

INLET TYPE M (CONC.)

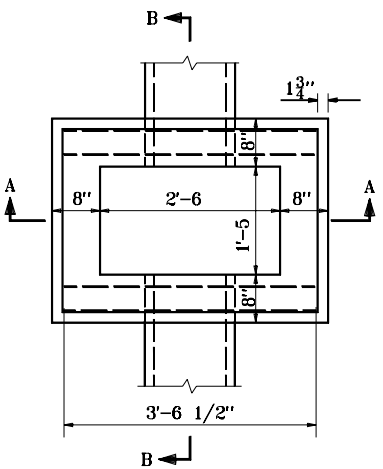

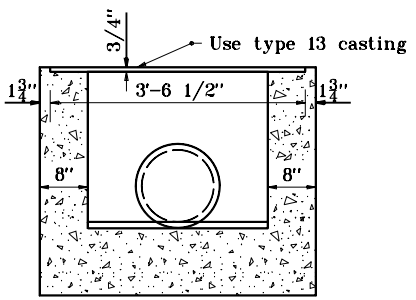

SECTION A-A

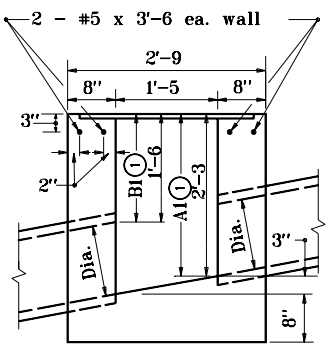

SECTION B-B

INLET TYPE R (CONC.)

INDIANA DEPARTMENT OF TRANSPORTATION

INLETS TYPE M AND R

SEPTEMBER 1997

STANDARD DRAWING NO. E 720-INST-07

ANTHONY L. UREMOVICH REGISTERED No. 18095 STATE OF INDIANA PROFESSIONAL ENGINEER

DESIGN STANDARDS ENGINEER

DETAILS PLACED IN THIS FORMAT	11-15-99
/s/ Anthony L. Uremovich DESIGN STANDARDS ENGINEER	11-15-99 DATE
/s/ Firooz Zandi CHIEF HIGHWAY ENGINEER	11-15-99 DATE
ORIGINALLY APPROVED	9-01-97