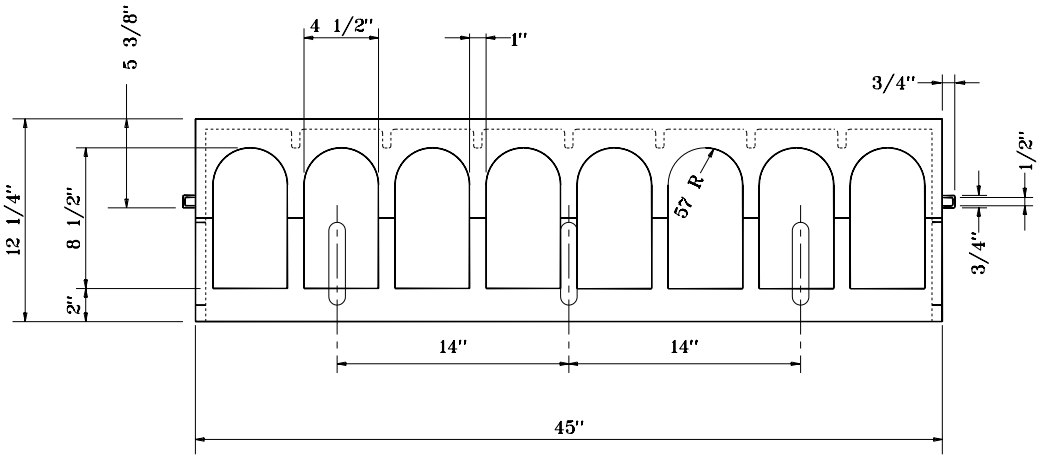

FRONT

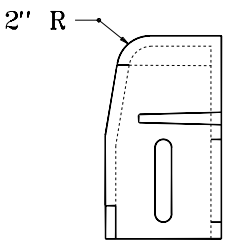

SIDE

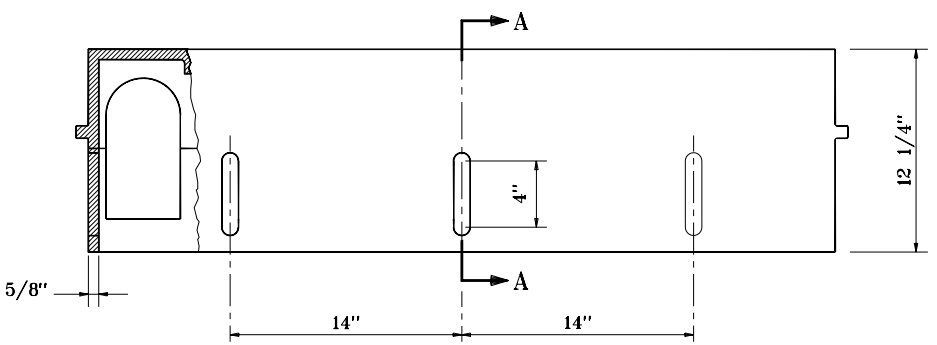

BACK

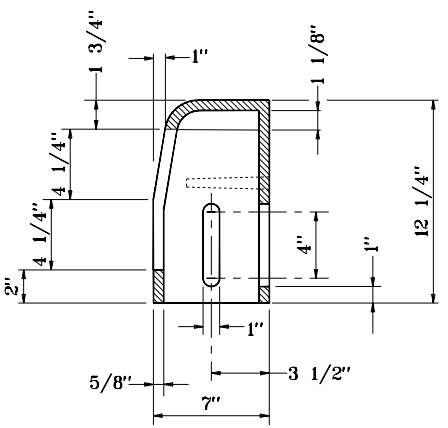

SECTION A-A

INDIANA DEPARTMENT OF TRANSPORTATION

CASTING TYPE 15
CURB BOX

SEPTEMBER 1998

STANDARD DRAWING NO. **E 720-ICCA-18**

ANTHONY L. UREMOVICH REGISTERED No. 18095 STATE OF INDIANA PROFESSIONAL ENGINEER

DESIGN STANDARDS ENGINEER

DETAILS PLACED IN THIS FORMAT	11-15-99
/s/ Anthony L. Uremovich DESIGN STANDARDS ENGINEER	11-15-99 DATE
/s/ Firooz Zandi CHIEF HIGHWAY ENGINEER	11-15-99 DATE
ORIGINALLY APPROVED	9-01-98