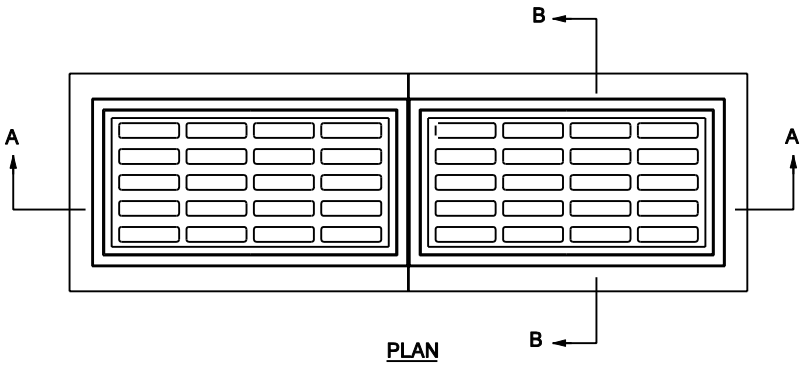

PLAN

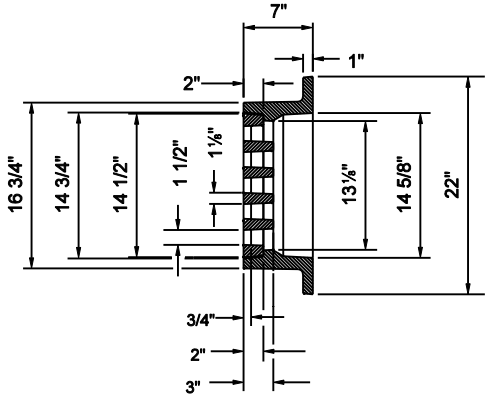

SECTION B-B

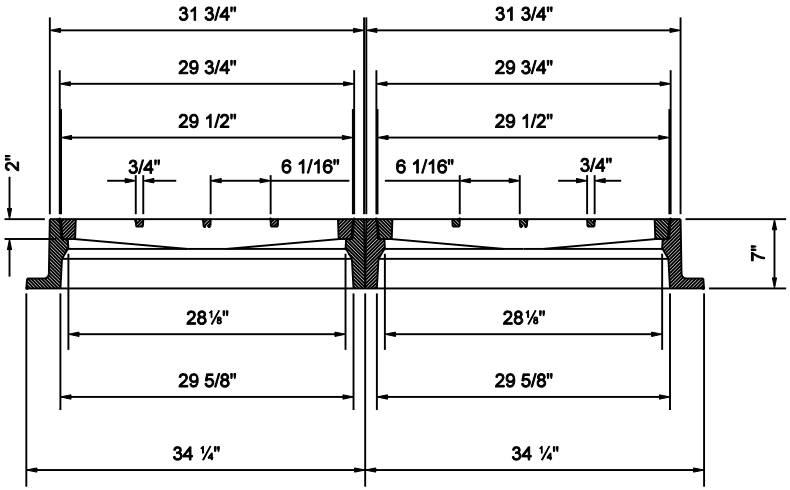

SECTION A-A

FRAME AND GRATE
CASTING TYPE 14

INDIANA DEPARTMENT OF TRANSPORTATION

CASTING TYPE 14
FRAME AND GRATE

SEPTEMBER 2003

STANDARD DRAWING NO. E 720-ICCA-15

RICHARD L. VanCLEAVE
REGISTERED
No. 9750
STATE OF INDIANA
PROFESSIONAL ENGINEER

DESIGN STANDARDS ENGINEER

/s/ Richard L. VanCleave 9-02-03
DESIGN STANDARDS ENGINEER DATE

/s/ Richard K. Smutzer 9-02-03
CHIEF HIGHWAY ENGINEER DATE