GENERAL NOTES

(1) Spacing shall be $1\frac{7}{8}$" c. to c. min., and $2\frac{3}{8}$" c. to c. max.

(2) The dimensions of the angle iron frame shall be as shown except that the A dimension may vary according to type of grating used.

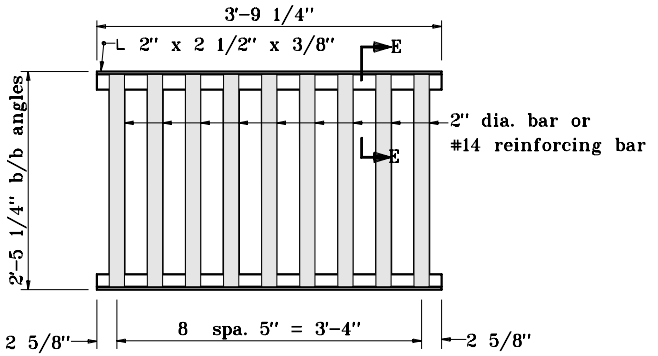

ALTERNATE STEEL GRATING
(To be used with steel frame type 12 or 12A)

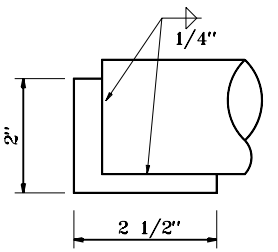

SECTION E-E

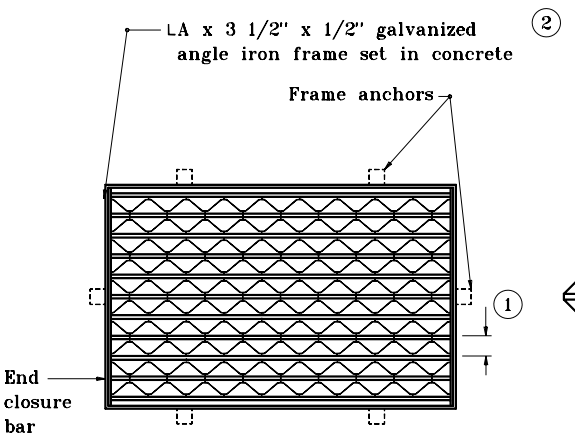

STEEL GRATING AND FRAME
TYPE 12A

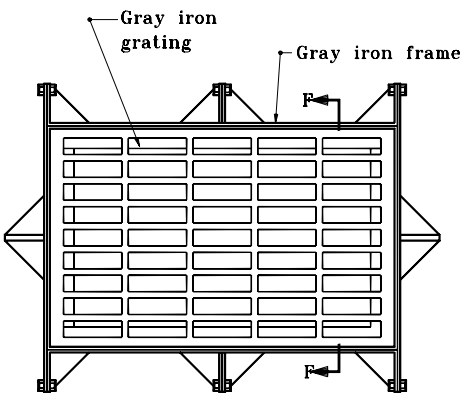

GRATE AND FRAME CASTING
ALTERNATE TYPE 12A

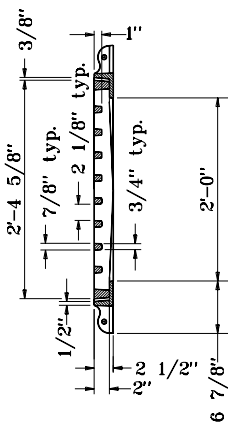

SECTION F-F

INDIANA DEPARTMENT OF TRANSPORTATION

STEEL GRATING TYPE 12A
FRAME AND GRATE
SEPTEMBER 1998

STANDARD DRAWING NO. **E 720-ICCA-12**

ANTHONY L. UREMOVICH REGISTERED No. 18095 STATE OF INDIANA PROFESSIONAL ENGINEER

DESIGN STANDARDS ENGINEER

DETAILS PLACED IN THIS FORMAT	11-15-99
/s/ Anthony L. Uremovich DESIGN STANDARDS ENGINEER	11-15-99 DATE
/s/ Firooz Zandi CHIEF HIGHWAY ENGINEER	11-15-99 DATE
ORIGINALLY APPROVED	9-01-98