NOTES

1. Bar spacing shall be 1 ⅞" c. to.c. minimum and 2 ⅜" c. to c. maximum.
2. The dimensions of the angle iron frame shall be as shown except that the A dimension may vary according to type of grating used.
3. For Section A-A, Section B-B see Standard Drawing E 720-INST-08.

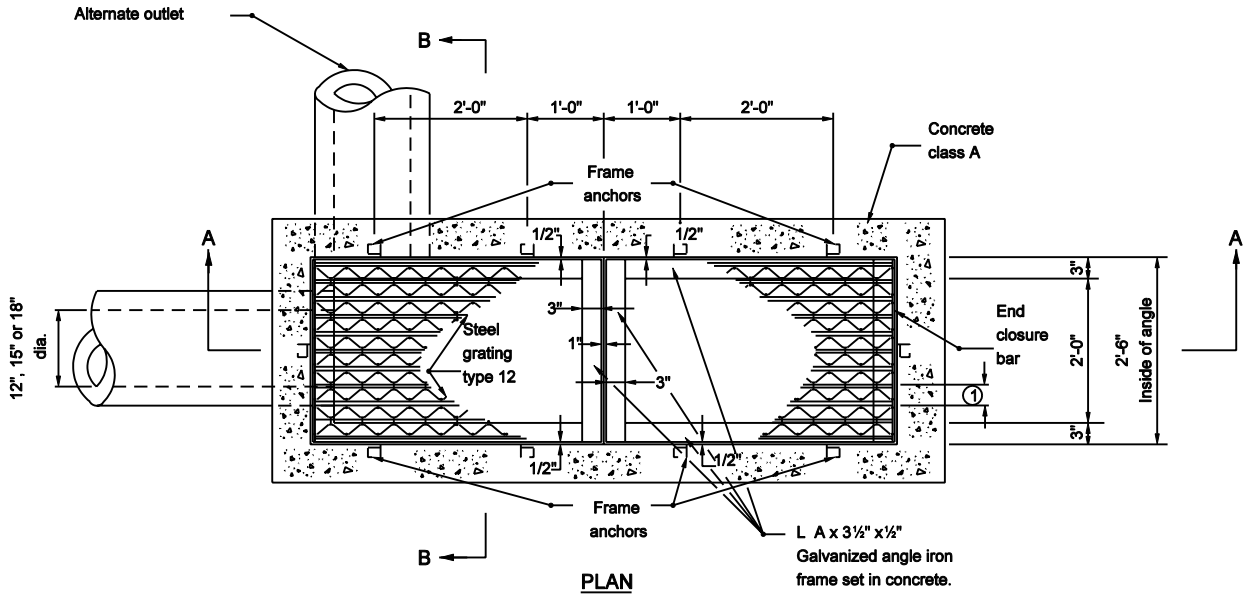

PLAN

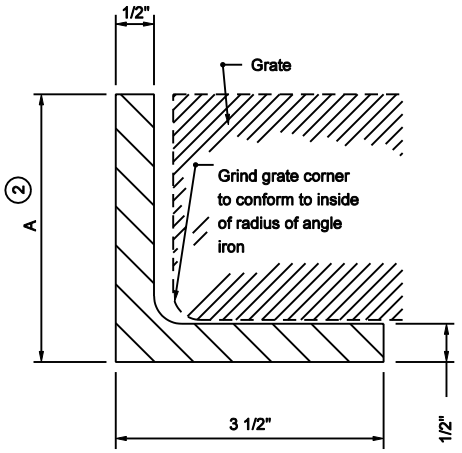

ANGLE IRON FRAME DETAIL

INDIANA DEPARTMENT OF TRANSPORTATION

STEEL GRATING TYPE 12 FRAME AND GRATE

SEPTEMBER 2003

STANDARD DRAWING NO. E 720-ICCA-10

RICHARD L. VanCLEAVE REGISTERED No. 9750 STATE OF INDIANA PROFESSIONAL ENGINEER

DESIGN STANDARDS ENGINEER

/s/ Richard L. VanCleave 9-02-03
DESIGN STANDARDS ENGINEER DATE

/s/ Richard K. Smutzer 9-02-03
CHIEF HIGHWAY ENGINEER DATE