GENERAL NOTES

1. Curb box adjustable from $5\frac{1}{4}''$ to $8\frac{3}{4}''$.

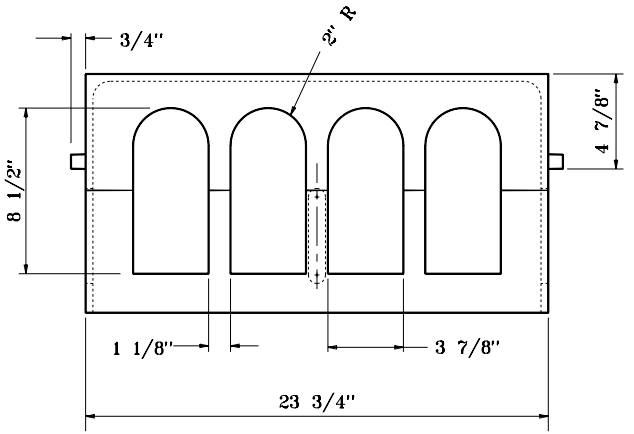

FRONT

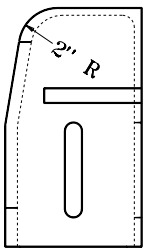

SIDE

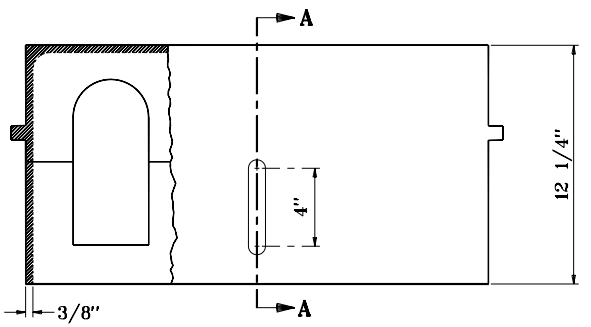

BACK

CURB BOX
CASTING TYPE 8

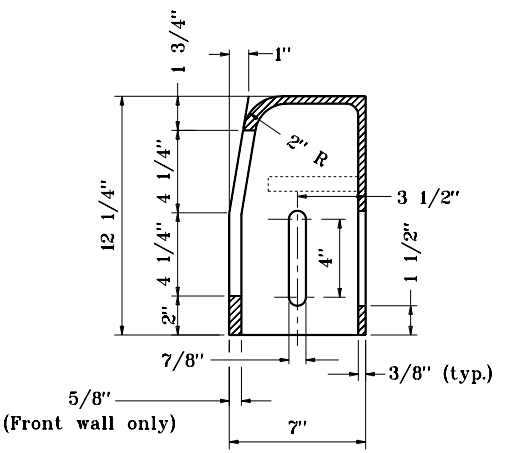

SECTION A-A

INDIANA DEPARTMENT OF TRANSPORTATION	
CASTING TYPE 8 CURB BOX SEPTEMBER 1998	
STANDARD DRAWING NO. E 720-ICCA-06	
ANTHONY L. UREMOVICH REGISTERED No. 18095 STATE OF INDIANA PROFESSIONAL ENGINEER	DETAILS PLACED IN THIS FORMAT 11-15-99
	/s/ Anthony L. Uremovich 11-15-99 DESIGN STANDARDS ENGINEER DATE
	/s/ Firooz Zandi 11-15-99 CHIEF HIGHWAY ENGINEER DATE
DESIGN STANDARDS ENGINEER	ORIGINALLY APPROVED 9-01-98