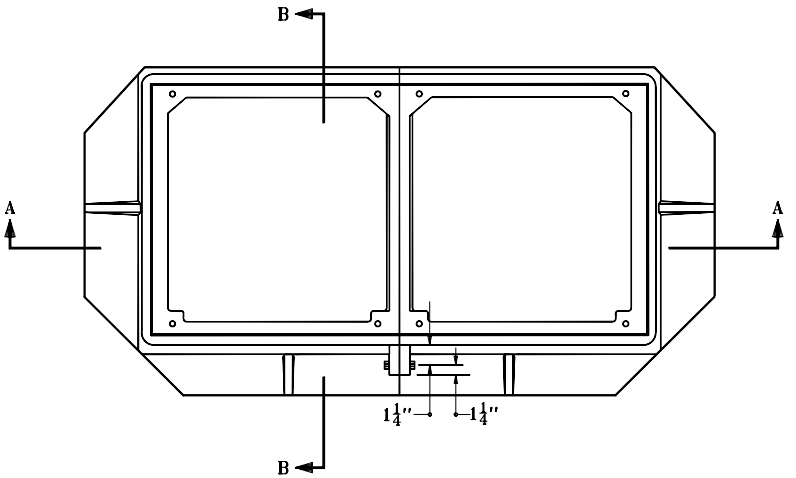

PLAN

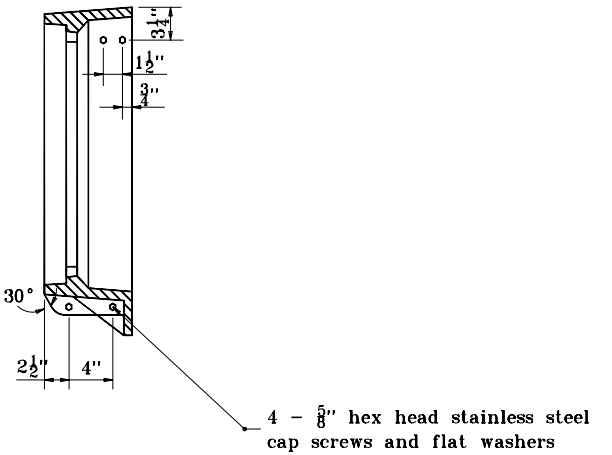

SECTION B–B

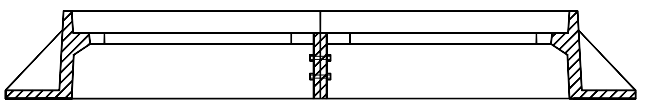

SECTION A–A

INDIANA DEPARTMENT OF TRANSPORTATION

CASTING TYPE 5 ALTERNATE BOLTED FRAME

SEPTEMBER 2001

STANDARD DRAWING NO. **E 720–ICCA–02**

RICHARD L. VanCLEAVE REGISTERED No. 9750 STATE OF INDIANA PROFESSIONAL ENGINEER

DESIGN STANDARDS ENGINEER

/s/ *Anthony L. Uremovich* 9–04–01
DESIGN STANDARDS ENGINEER DATE

/s/ *Firooz Zandi* 9–04–01
CHIEF HIGHWAY ENGINEER DATE