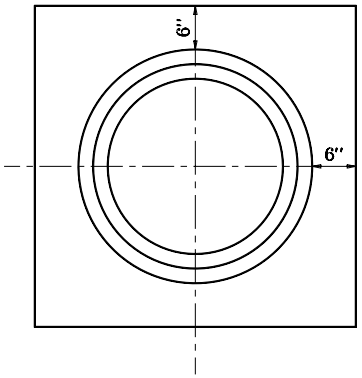

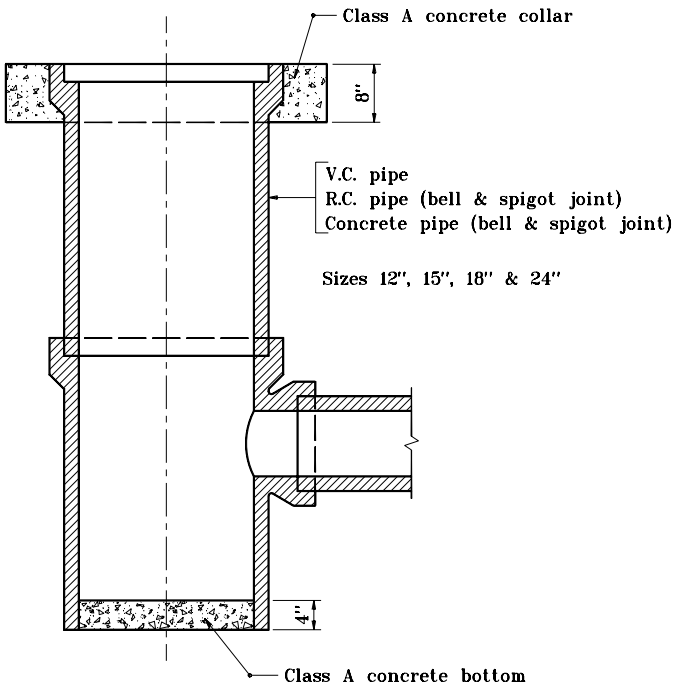

INDIANA DEPARTMENT OF TRANSPORTATION

CATCH BASIN PIPE

APRIL 1995

STANDARD DRAWING NO. **E 720-CBST-06**

ANTHONY L. UREMOVICH REGISTERED No. 18095 STATE OF INDIANA PROFESSIONAL ENGINEER

DESIGN STANDARDS ENGINEER

DETAILS PLACED IN THIS FORMAT	11-15-99
/s/ Anthony L. Uremovich DESIGN STANDARDS ENGINEER	11-15-99 DATE
/s/ Firooz Zandi CHIEF HIGHWAY ENGINEER	11-15-99 DATE
ORIGINALLY APPROVED	4-03-95