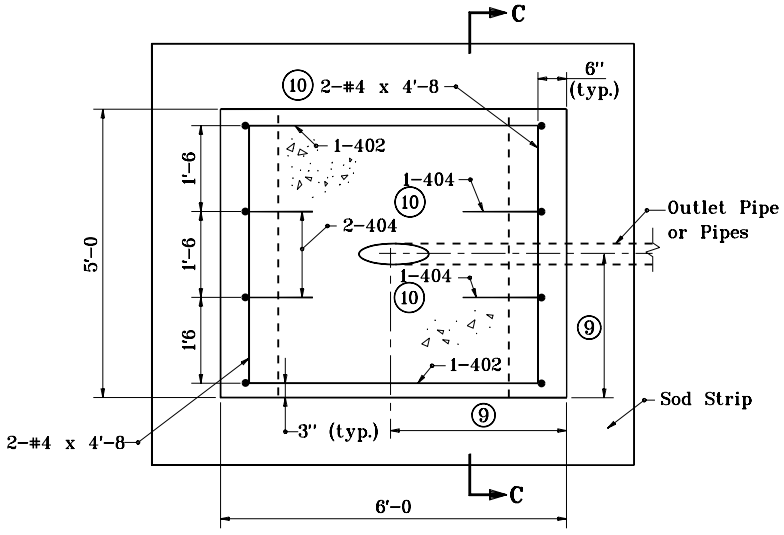

PLAN VIEW

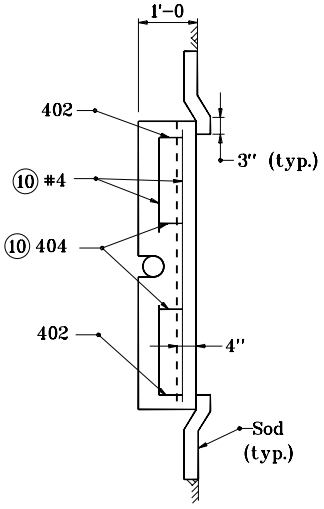

SECTION C-C

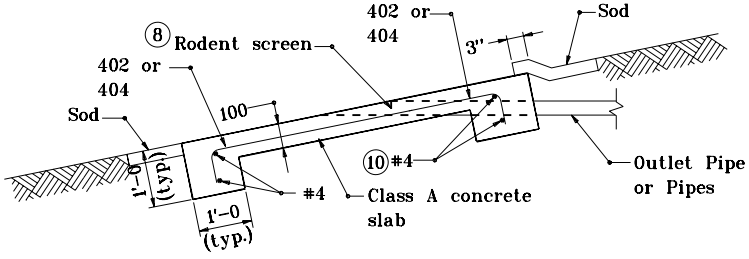

TYPICAL SECTION

NOTE:

1. See Standard Drawing E 718-UNDR-07 for General Notes pertaining to this sheet.

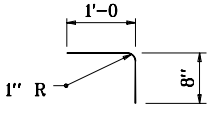

404 x 1'-8

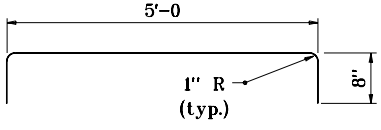

402 x 6'-4

INDIANA DEPARTMENT OF TRANSPORTATION

OUTLET PROTECTOR, TYPE 2

JANUARY 2000

STANDARD DRAWING NO. **E 718-UNDR-04**

ANTHONY L. UREMOVICH REGISTERED No. 18095 STATE OF INDIANA PROFESSIONAL ENGINEER

/s/ Anthony L. Uremovich 1-03-00
DESIGN STANDARDS ENGINEER DATE

/s/ Donald W. Lucas 1-03-00
CHIEF HIGHWAY ENGINEER DATE

DESIGN STANDARDS ENGINEER