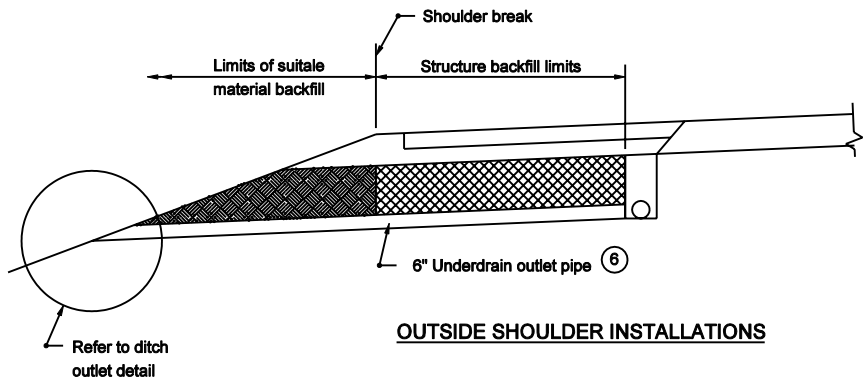

OUTSIDE SHOULDER INSTALLATIONS

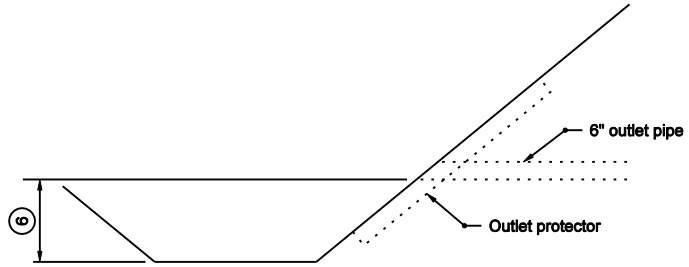

DITCH OUTLET DETAIL

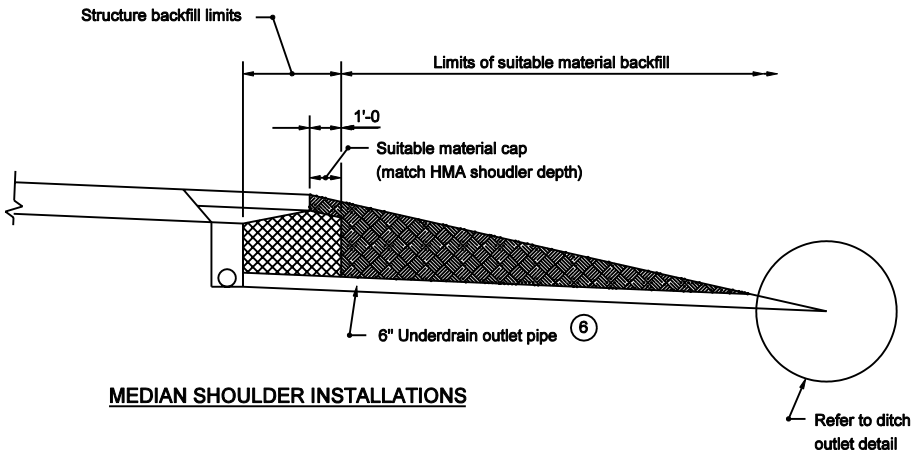

MEDIAN SHOULDER INSTALLATIONS

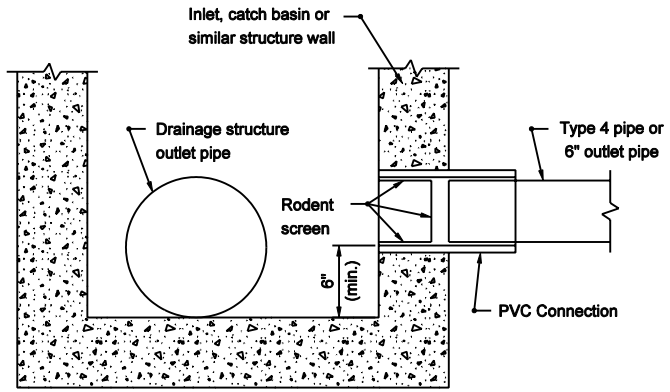

DRAINAGE STRUCTURE OUTLET DETAIL

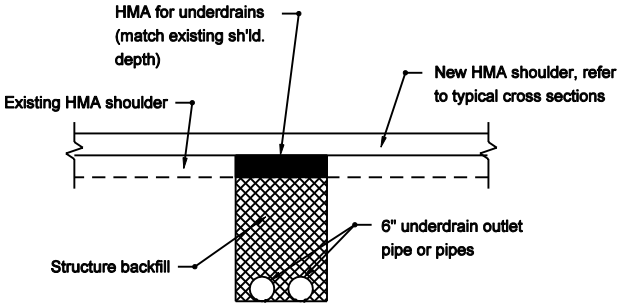

RETROFIT UNDERDRAIN OUTLET DETAIL (UNDER PAVED SHOULDER)

NOTE:

1. Standard Drawing E 718-UNDR-07 for General Notes pertaining to this sheet.

INDIANA DEPARTMENT OF TRANSPORTATION

UNDERDRAIN DETAILS

MARCH 2003

STANDARD DRAWING NO. E 718-UNDR-02

ANTHONY L. UREMOVICH REGISTERED No. 18095 STATE OF INDIANA PROFESSIONAL ENGINEER

DESIGN STANDARDS ENGINEER

/s/ Anthony L. Uremovich 3-03-03
DESIGN STANDARDS ENGINEER DATE

/s/ Richard K. Smutzer 3-03-03
CHIEF HIGHWAY ENGINEER DATE