GENERAL NOTES

1. For dimension or enter chart on Standard Drawing E 715-ANCH-01 with known dimension D.
2. For dimensions, enter chart on Standard Drawing E 715-ANCH-02 with known span and rise.
3. Riprap shall be placed at the ends of pipe structures when shown on plans.

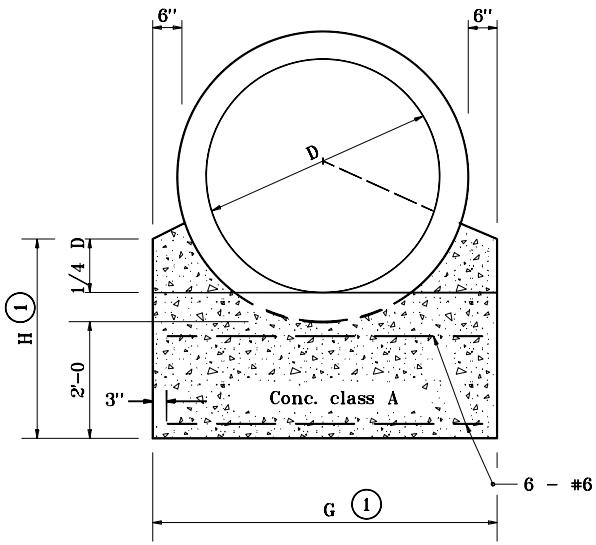

ANCHOR FOR
REINFORCED CONCRETE PIPE
FRONT ELEVATION

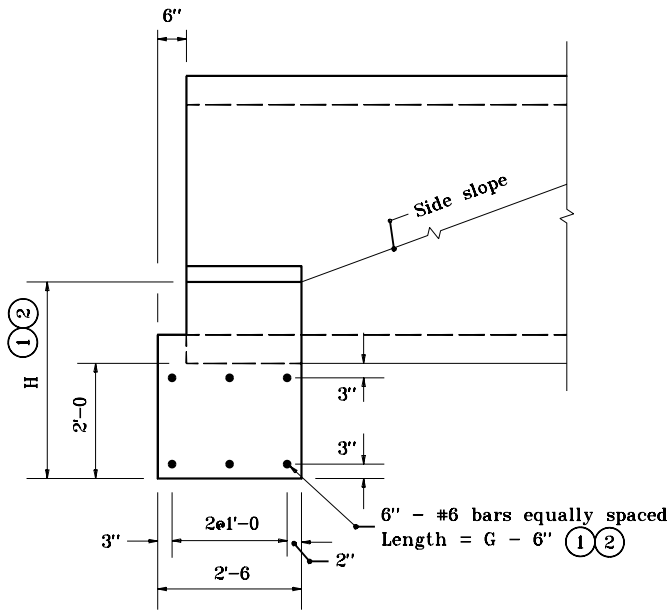

SIDE ELEVATION

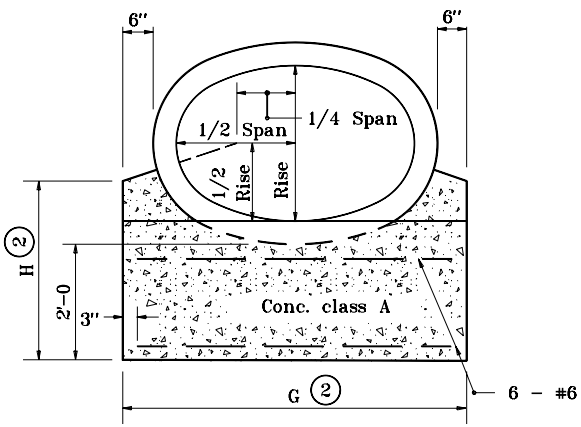

ANCHOR FOR
REINFORCED CONCRETE HORIZONTAL ELLIPTICAL PIPE
FRONT ELEVATION

INDIANA DEPARTMENT OF TRANSPORTATION

SINGLE PIPE
CONCRETE ANCHOR
JANUARY 1998

STANDARD DRAWING NO. **E 715-SPCA-02**

ANTHONY L. UREMOVICH REGISTERED No. 18095 STATE OF INDIANA PROFESSIONAL ENGINEER

DESIGN STANDARDS ENGINEER

DETAILS PLACED IN THIS FORMAT	7-27-99
/s/ Anthony L. Uremovich DESIGN STANDARDS ENGINEER	7-27-99 DATE
/s/ Firooz Zandi CHIEF HIGHWAY ENGINEER	7-27-99 DATE
ORIGIANLLY APPROVED	1-02-98