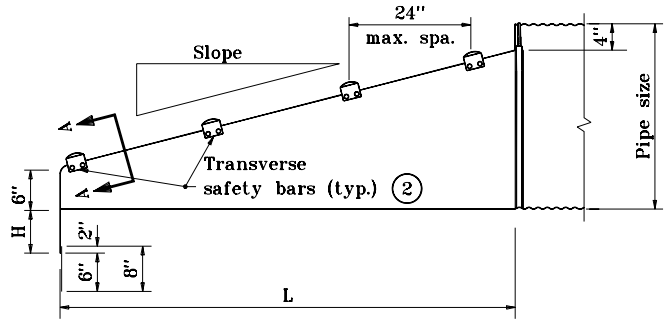

SIDE ELEVATION OF PARALLEL STRUCTURE END SECTION

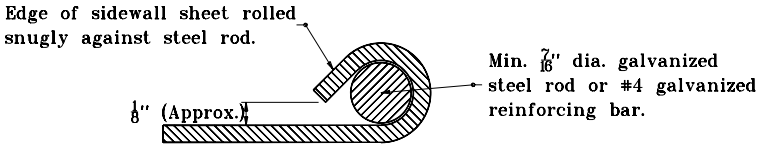

SECTION A–A

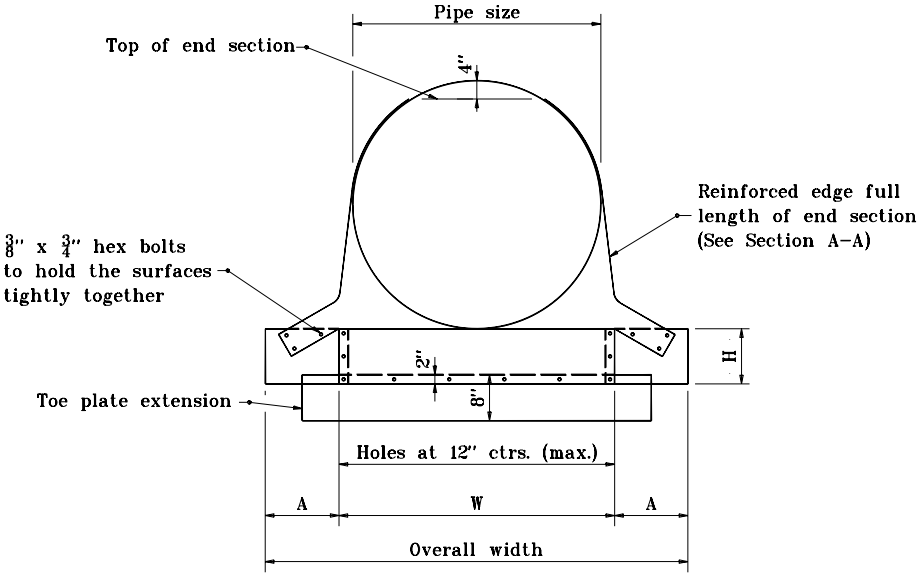

FRONT VIEW

GENERAL NOTES

1. See Standard Drawing E 715–SMES–06 for variable dimensions.

2. Transverse safety bars shall be schedule 40 galvanized steel pipe. Pipe shall be galvanized after forming. Number of bars required will vary depending on the length of the end sections.

3. The toe plate extension shall be the same thickness as the end section. The dimension shall be the end section overall width less 6".

INDIANA DEPARTMENT OF TRANSPORTATION

SAFETY METAL CULVERT END SECTIONS FOR CORRUGATED PIPE

JANUARY 1998

STANDARD DRAWING NO. E 715–SMES–04

ANTHONY L. UREMOVICH REGISTERED No. 18095 STATE OF INDIANA PROFESSIONAL ENGINEER

DESIGN STANDARDS ENGINEER

DETAILS PLACED IN THIS FORMAT	7-27-99
/s/ Anthony L. Uremovich DESIGN STANDARDS ENGINEER	7-27-99 DATE
/s/ Firooz Zandi CHIEF HIGHWAY ENGINEER	7-27-99 DATE
ORIGINALLY APPROVED	1-02-98