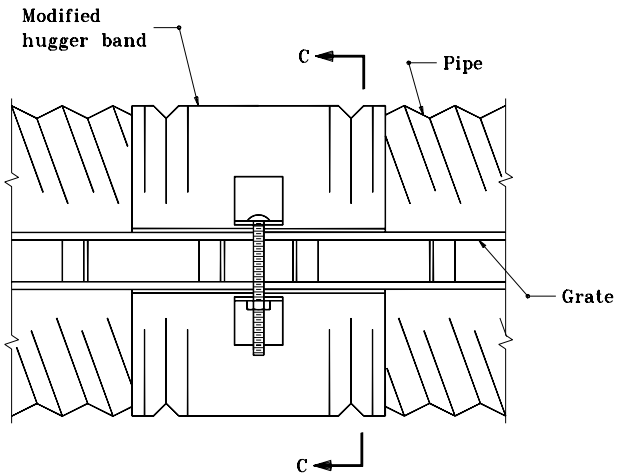


**MODIFIED HUGGER BAND**
**TOP VIEW**

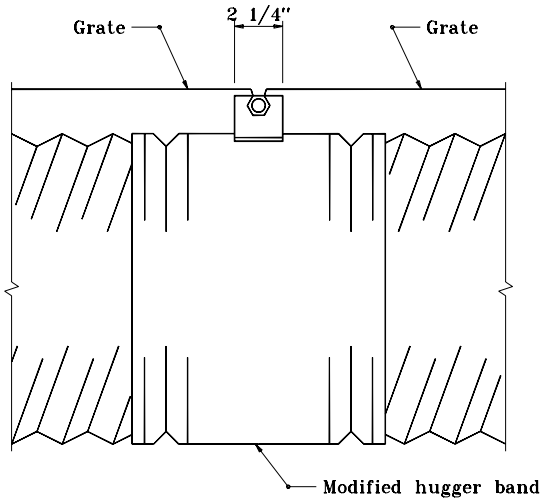


**MODIFIED HUGGER BAND**
**SIDE VIEW**

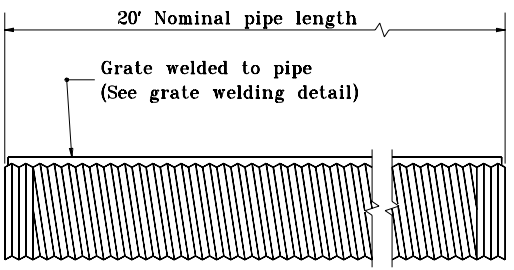


**TYPICAL PIPE SECTION**

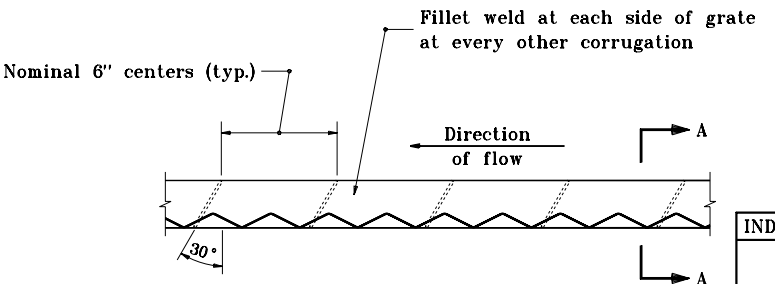


**GRATE WELDING DETAIL**

INDIANA DEPARTMENT OF TRANSPORTATION

**SLOTTED DRAIN PIPE**

APRIL 1995

STANDARD DRAWING NO. **E 715-SDLR-01**

ANTHONY L. UREMOVICH REGISTERED No. 18095 STATE OF INDIANA PROFESSIONAL ENGINEER

DESIGN STANDARDS ENGINEER

| | |
|---|---|
| DETAILS PLACED IN THIS FORMAT | 11-15-99 |
| /s/ Anthony L. Uremovich<br>DESIGN STANDARDS ENGINEER | 11-15-99<br>DATE |
| /s/ Firooz Zandi<br>CHIEF HIGHWAY ENGINEER | 11-15-99<br>DATE |
| ORIGINALLY APPROVED | 4-04-95 |