GENERAL NOTES

1. Hook bolts and anchor straps shall be used at both upstream and downstream ends of all C.A., C.S., and structural plate pipes and pipe diameter or span of 84" or greater.

2. See Standard Drawing E 715-PASD-01 for anchor strap details.

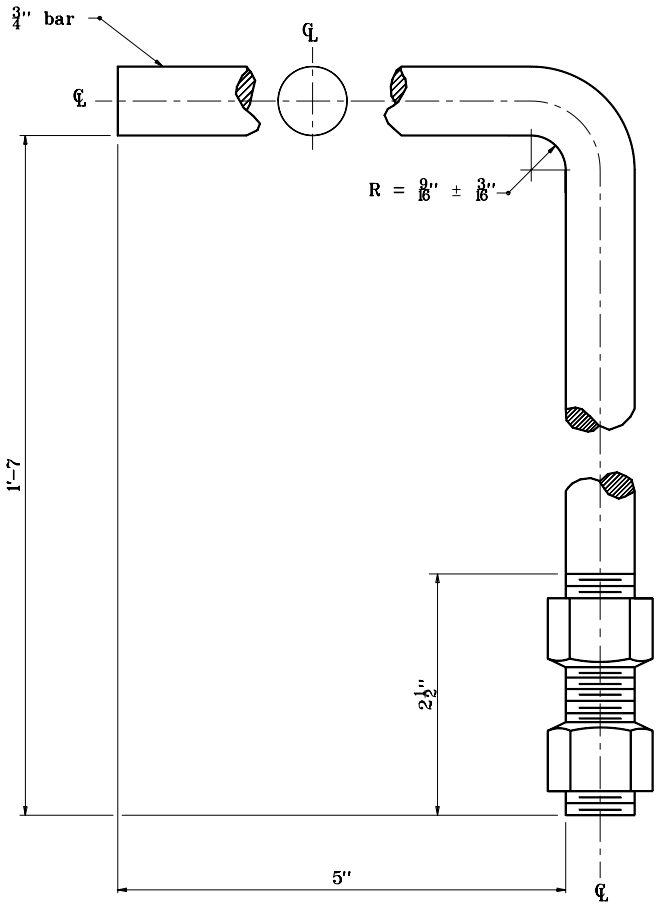

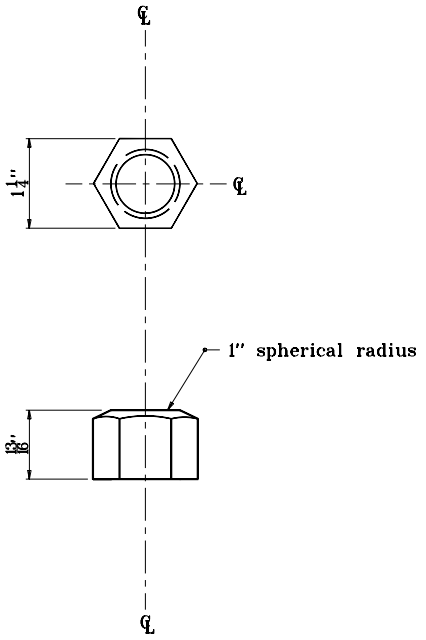

GALVANIZED
HOOK BOLT AND NUTS

INDIANA DEPARTMENT OF TRANSPORTATION

PIPE ANCHOR HOOK
BOLT DETAILS

APRIL 1995

STANDARD DRAWING NO. **E 715-PAHB-01**

ANTHONY L. UREMOVICH REGISTERED No. 18095 STATE OF INDIANA PROFESSIONAL ENGINEER

DESIGN STANDARDS ENGINEER

DETAILS PLACED IN THIS FORMAT 7-27-99

/s/ Anthony L. Uremovich 7-23-99
DESIGN STANDARDS ENGINEER DATE

/s/ Dorothy W. Lukas 7-23-99
CHIEF HIGHWAY ENGINEER DATE

ORIGIANLLY APPROVED 4-01-95