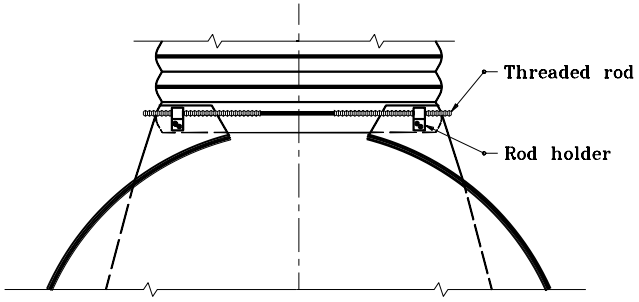

TYPE 1
FOR 17" x 13" THROUGH 42" x 29" ONLY

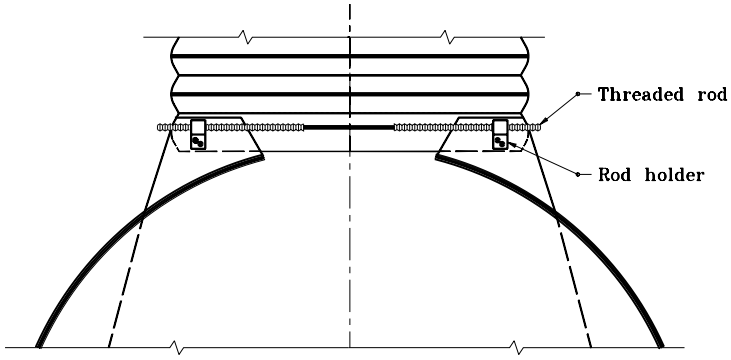

TYPE 4
FOR 30" THROUGH 36" ONLY

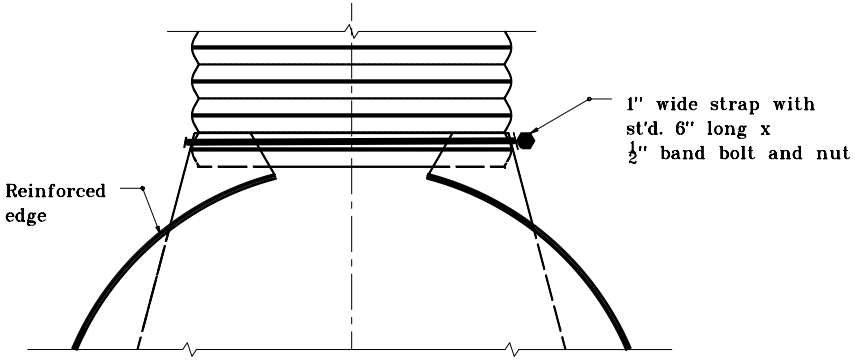

ALTERNATE TYPE 3
FOR 12" THROUGH 24" ONLY

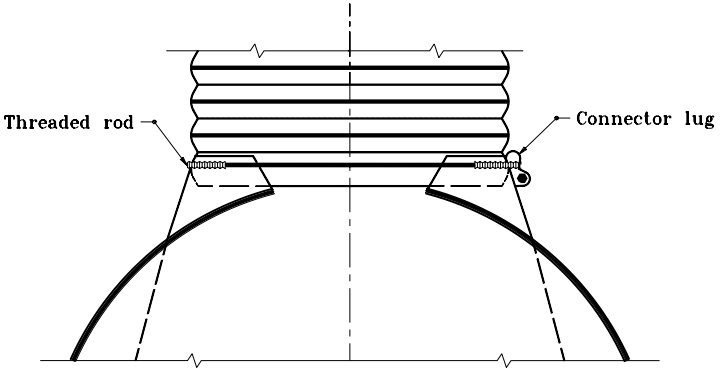

TYPE 3
FOR 12" THROUGH 24" ONLY

INDIANA DEPARTMENT OF TRANSPORTATION

METAL PIPE
END SECTION CONNECTIONS
JANUARY 1998

STANDARD DRAWING NO. **E 715-MPES-03**

ANTHONY L. UREMOVICH REGISTERED No. 18095 STATE OF INDIANA PROFESSIONAL ENGINEER

DESIGN STANDARDS ENGINEER

DETAILS PLACED IN THIS FORMAT 7-27-99

/s/ Anthony L. Uremovich 7-27-99
DESIGN STANDARDS ENGINEER DATE

/s/ Firooz Zandi 7-27-99
CHIEF HIGHWAY ENGINEER DATE

ORIGINALLY APPROVED 1-02-98