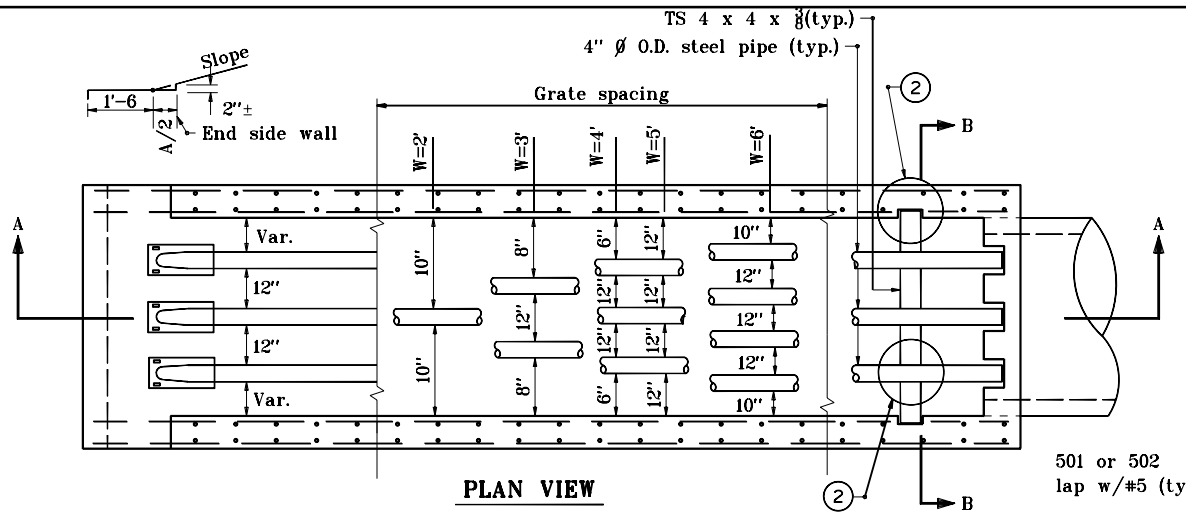

PLAN VIEW

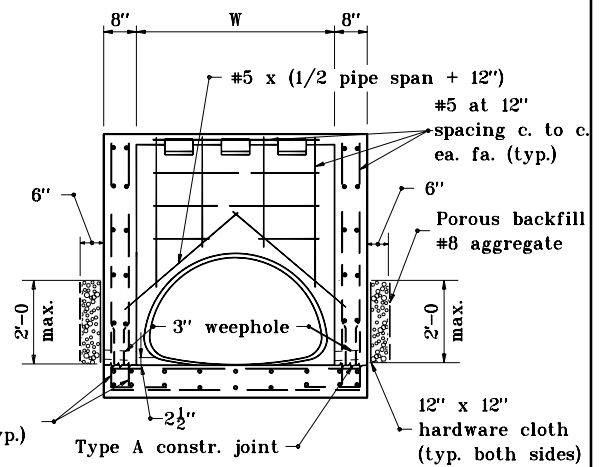

GRATE REMOVED

SECTION B-B

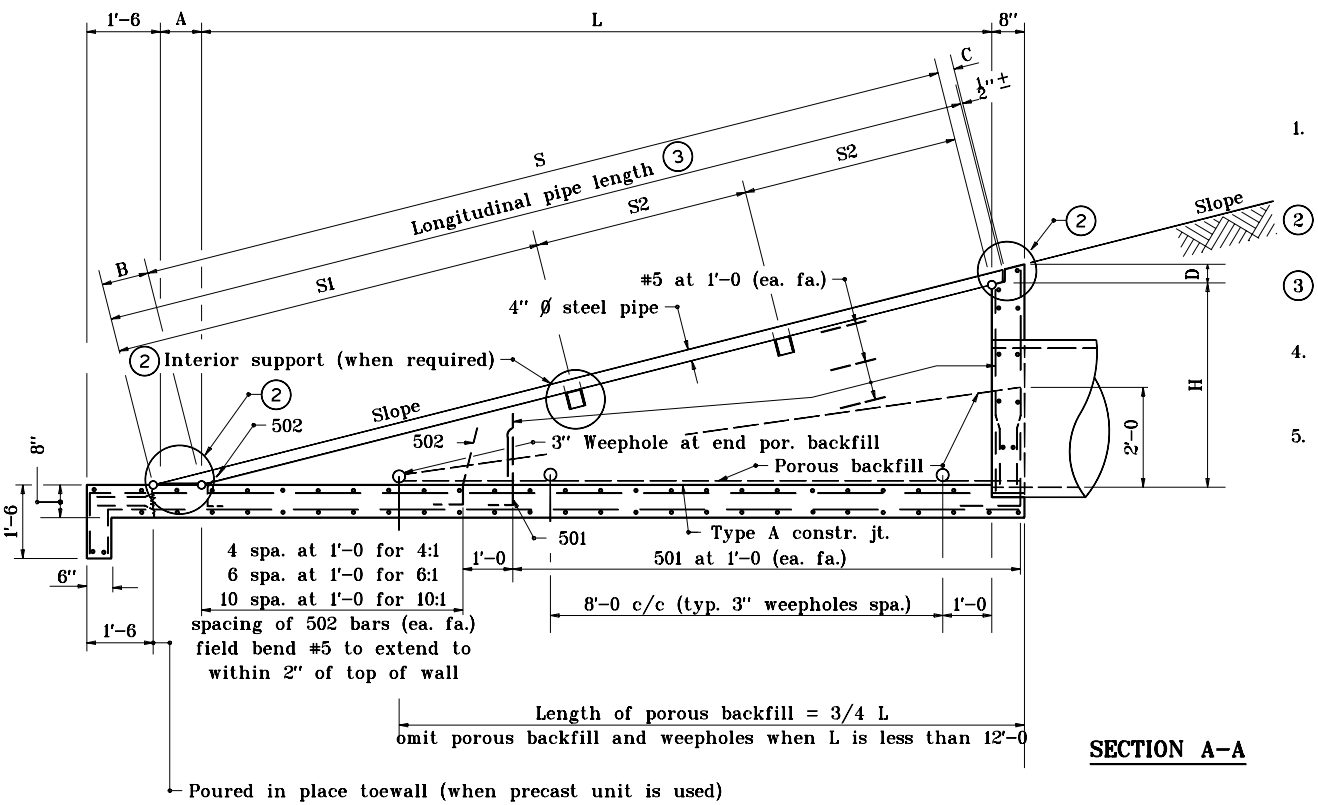

SECTION A-A

GENERAL NOTES

1. The invert grade of the grated box end section shall be the same as that of the pipe.
2. See Standard Drawing E 715-GBTO-04 for Details A, B, C, and D.
3. See Standard Drawings E 715-GBTO-05 through -08 for tables.
4. Type I grated box end sections shall be used for mainline cross-culverts' outlet pipes within the clear zone.
5. See Standard Drawing E 715-GBTO-02 for bending diagrams.

INDIANA DEPARTMENT OF TRANSPORTATION

GRATED BOX END SECTION TYPE I

JANUARY 1999

STANDARD DRAWING NO. E 715-GBTO-03

ANTHONY L. UREMOVICH REGISTERED No. 18095 STATE OF INDIANA PROFESSIONAL ENGINEER

DESIGN STANDARDS ENGINEER

DETAILS PLACED IN THIS FORMAT	11-15-99
/s/ Anthony L. Uremovich DESIGN STANDARDS ENGINEER	11-15-99 DATE
/s/ Firooz Zandi CHIEF HIGHWAY ENGINEER	11-15-99 DATE
ORIGINALLY APPROVED	1-04-99