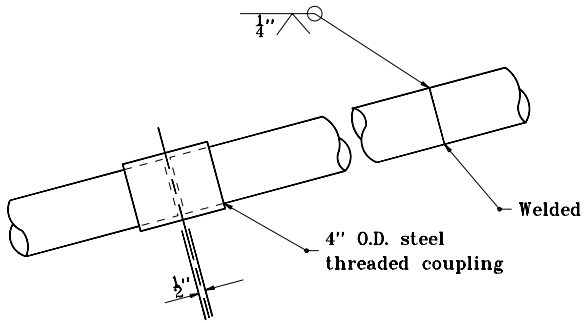

OPTIONAL SHOP SPLICE

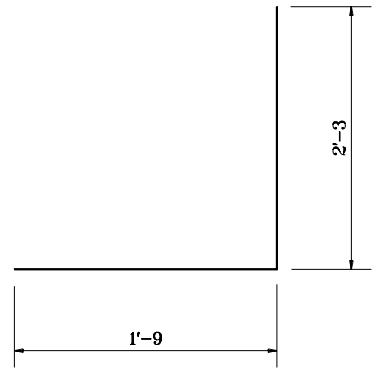

501 x 4'-0

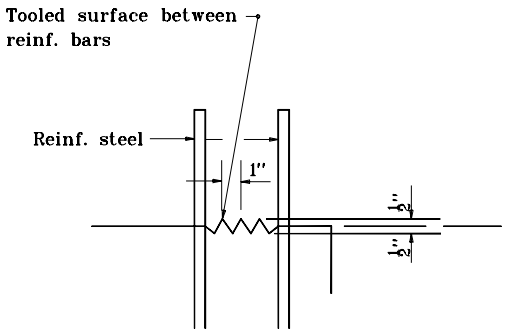

TYPE A CONSTRUCTION JOINT

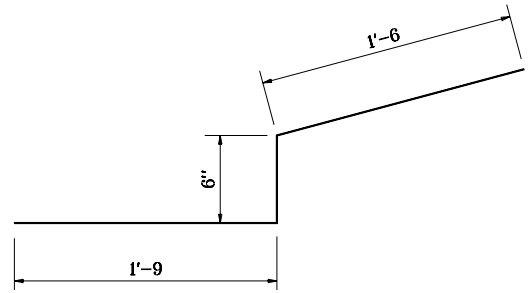

502 x 3'-9

INDIANA DEPARTMENT OF TRANSPORTATION

GRATED BOX END SECTION
TYPE I

JANUARY 1999

STANDARD DRAWING NO. E 715-GBT0-02

ANTHONY L. UREMOVICH REGISTERED No. 18095 STATE OF INDIANA PROFESSIONAL ENGINEER

DESIGN STANDARDS ENGINEER

DETAILS PLACED IN THIS FORMAT	7-27-99
/s/ Anthony L. Uremovich DESIGN STANDARDS ENGINEER	7-27-99 DATE
/s/ Firooz Zandi CHIEF HIGHWAY ENGINEER	7-27-99 DATE
ORIGINALLY APPROVED	1-04-99