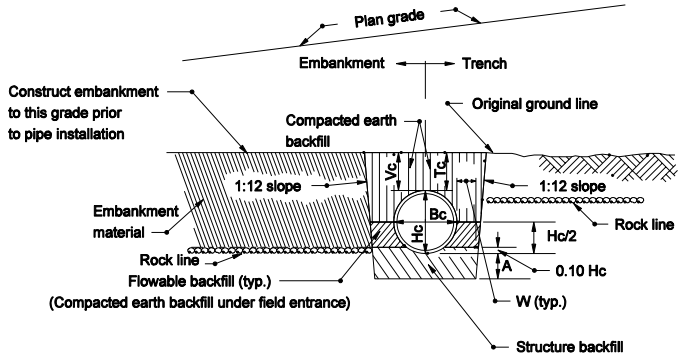

SECTION D-D
EMBANKMENT/TRENCH INSTALLATION
ROCK FOUNDATION

NOTES

1. Refer to Standard Drawing E 715-BKFL-09 for general notes.

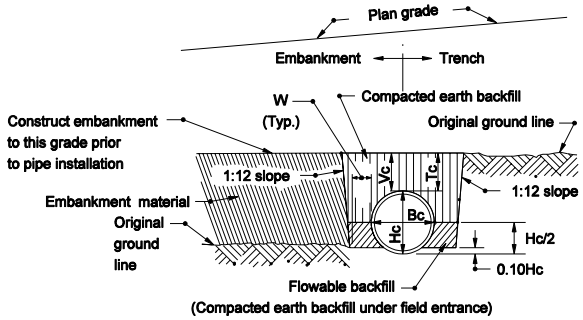

SECTION D-D
EMBANKMENT/TRENCH INSTALLATION

LEGEND

Hc = Overall diameter or rise
Bc = Overall diameter or span
A = 8" min. for fill height up to 16'
= 12" min. for fill height of 16' or more
Vc = 12" for Bc ≤ 18"
= 18" for Bc > 18"
Tc = Trench cover depth
W = 6" for Bc ≤ 21"
= 0.3 Bc for 21" < Bc ≤ 42"
= 12" for Bc > 42"
⑦ E = Encasement

METHOD 2 BACKFILL

Structures under commercial and private drive approaches.

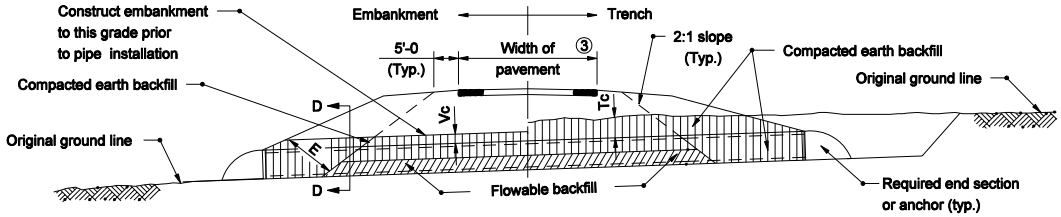

ELEVATION

INDIANA DEPARTMENT OF TRANSPORTATION

PIPE STRUCTURE BACKFILL DRIVEWAY INSTALLATIONS

MARCH 2004

STANDARD DRAWING NO. E 715-BKFL-08

RICHARD L. VanCLEAVE REGISTERED No. 9750 STATE OF INDIANA PROFESSIONAL ENGINEER

DESIGN STANDARDS ENGINEER

/s/ Richard L. VanCleave 3-01-04
DESIGN STANDARDS ENGINEER DATE

/s/ Richard K. Smutzer 3-01-04
CHIEF HIGHWAY ENGINEER DATE