NOTE

1. Refer to Standard Drawing E 715-BKFL-09 for general notes.

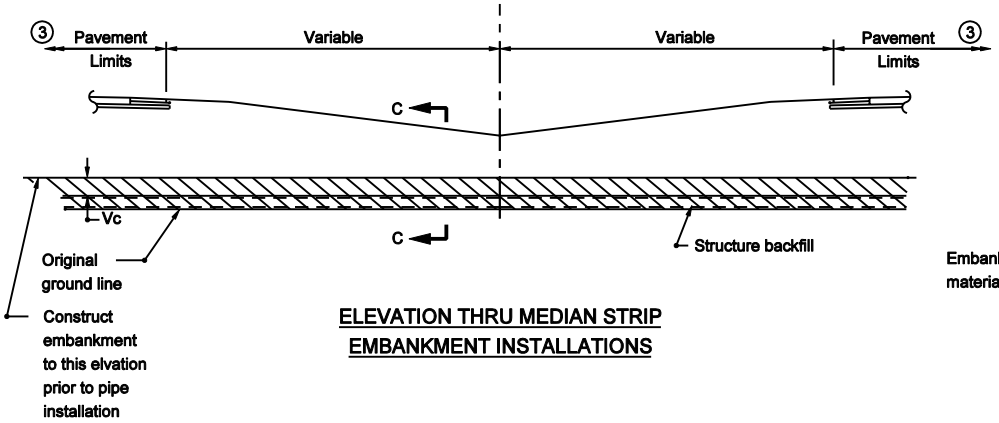

ELEVATION THRU MEDIAN STRIP
EMBANKMENT INSTALLATIONS

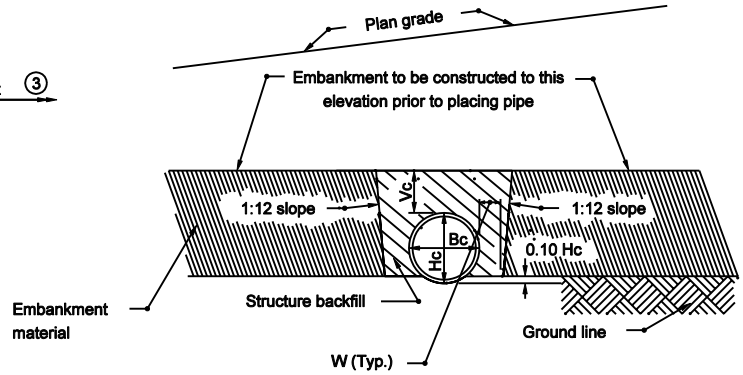

SECTION C-C
EMBANKMENT INSTALLATIONS

LEGEND

Hc = Overall diameter or rise
Bc = Overall diameter or span
A = 8" min. for fill height up to 16'
= 12" min. for fill height of 16' or more
Vc = 12" for Bc ≤ 18"
= 18" for Bc > 18"
Tc = Trench cover depth
W = 0.3 Bc or 9", whichever is greater

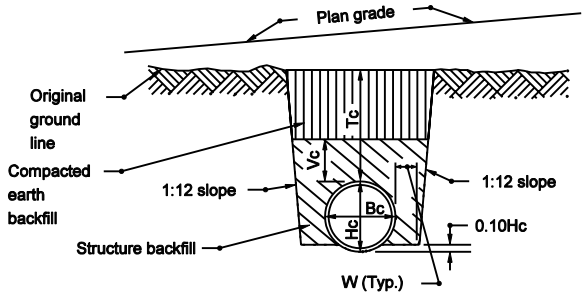

SECTION C-C
TRENCH INSTALLATIONS

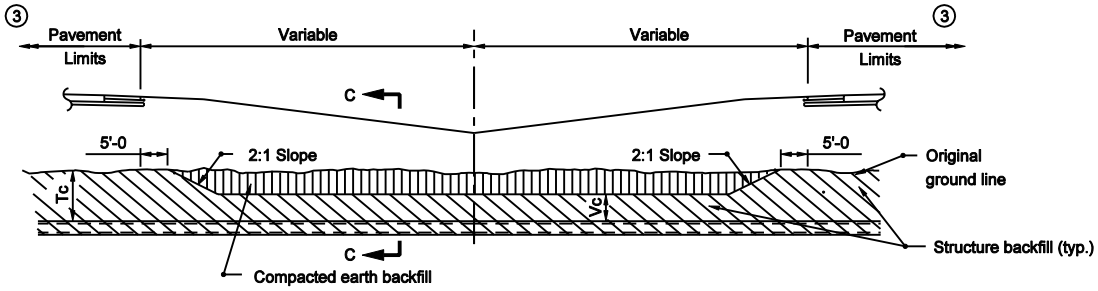

ELEVATION THRU MEDIAN STRIP
TRENCH INSTALLATIONS

INDIANA DEPARTMENT OF TRANSPORTATION

PIPE STRUCTURE BACKFILL MEDIAN INSTALLATIONS

MARCH 2003

STANDARD DRAWING NO. E 715-BKFL-05

REGISTERED ANTHONY L. UREMOVICH No. 18095 STATE OF INDIANA PROFESSIONAL ENGINEER
DESIGN STANDARDS ENGINEER

/s/ Anthony L. Uremovich 3-03-03
DESIGN STANDARDS ENGINEER DATE

/s/ Firooz Zandi 3-03-03
CHIEF HIGHWAY ENGINEER DATE