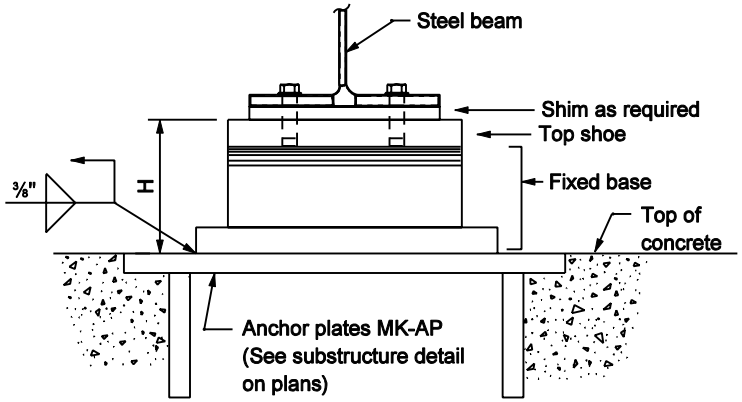

FIXED SHOE ASSEMBLY

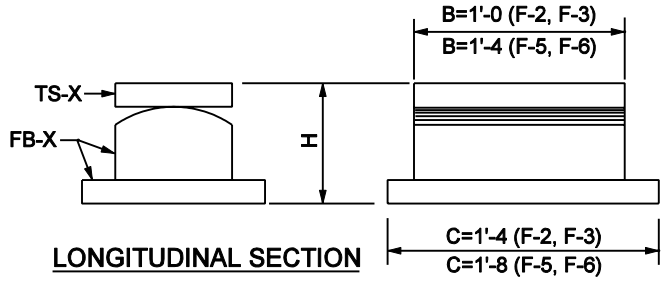

LONGITUDINAL SECTION

Shoe Type	Maximum Reaction	Shoe Assembly TS-X	Shoe Assembly FB-X	H
F-2	177 k	TS-2	FB-2	8"
F-3	245 k	TS-3	FB-3	
F-5	225 k	TS-5	FB-5	
F-6	309 k	TS-6	FB-6	

NOTES :

1. Curved surfaces of shoes to be machined after weldments have been completed. At the contractor's option the following substitutions of materials will be allowed at no increase in unit price of material:

a). A-709 Grade 50W steel may be used in lieu of A-709 Grade 36 steel.

b). A-709 Grade 100 steel may be used in lieu of A-709 Grade 50W or A-709 Grade 36 steels.

2. Section "pb" to be finished from 4" thickness while Section "pc" is to be straightened.

3. Maximum horizontal thrust per Fixed Shoe = 5000 lb.

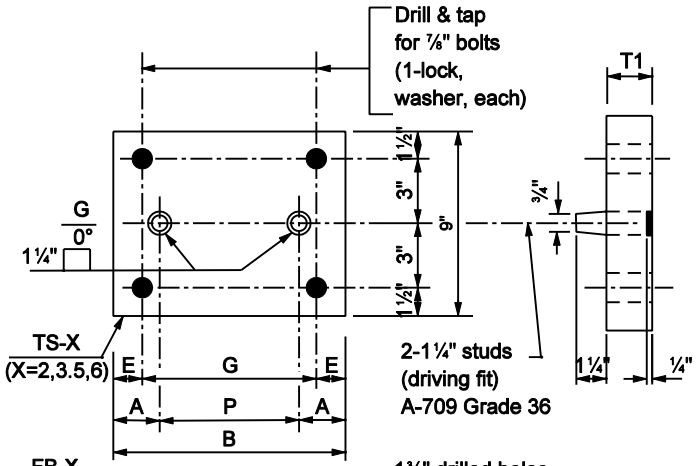

TS-X	T1	E	G	A	P	Section	Material
TS-1 *	1 3/4	2 1/4	7 1/2	2 1/4	7 1/2	PL 9 x 1 3/4	A-709 Grade 36
TS-2	2	2 1/4	7 1/2	2 1/4	7	PL 9 x 2	A-709 Grade 50W
TS-3	1 7/8	2 1/4	7 1/2	2 3/4	6 1/2	PL 9 x 2	A-709 Grade 100
TS-4 *	1 3/4	3	10	3	10	PL 9 x 1 3/4	A-709 Grade 36
TS-5	2	3	10	3 1/4	9 1/2	PL 9 x 2	A-709 Grade 50W
TS-6	1 7/8	3	10	3 1/2	9	PL 9 x 2	A-709 Grade 100

* Top shoe used with Expansion Steel Shoe only.

TOP SHOE

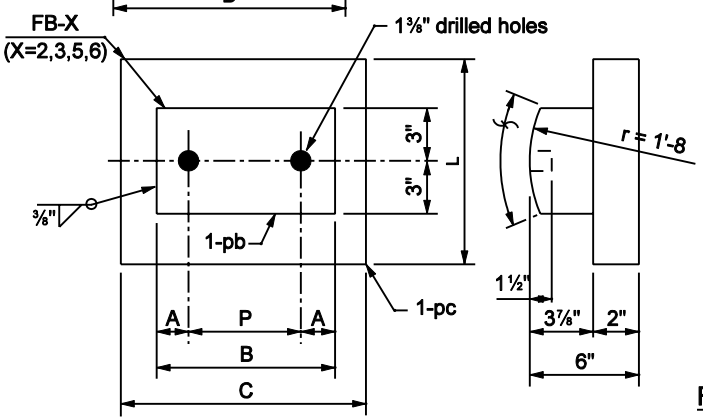

FB-X	C	L	B	A	P	Sections pb	Sections pc
FB-2	1'-4	1'-0	1'-0	2 1/2"	7	PL 6 x 4	PL 12 x 2
FB-3	1'-4	1'-4	1'-0	2 3/4"	6 1/2"	PL 6 x 4	PL 16 x 2
FB-5	1'-8	1'-0	1'-4	3 1/4"	9 1/2"	PL 6 x 4	PL 12 x 2
FB-6	1'-8	1'-4	1'-4	3 1/2"	9	PL 6 x 4	PL 16 x 2

FIXED BASE

INDIANA DEPARTMENT OF TRANSPORTATION

FIXED STEEL SHOE DETAILS

MARCH 2003

STANDARD DRAWING NO. E 711-BSTS-01

RICHARD L. VanCLEAVE REGISTERED No. 9750 STATE OF INDIANA PROFESSIONAL ENGINEER

DESIGN STANDARDS ENGINEER

/s/ Richard L. VanCleave 3-03-03
DESIGN STANDARDS ENGINEER DATE

/s/ Richard Smutzer 3-03-03
CHIEF HIGHWAY ENGINEER DATE