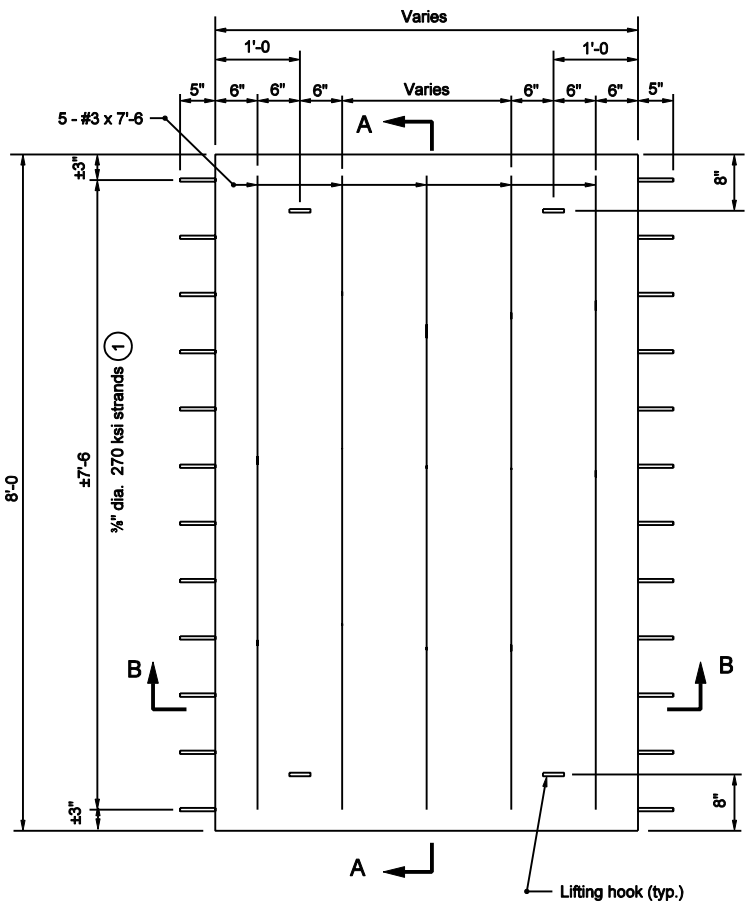

PLAN

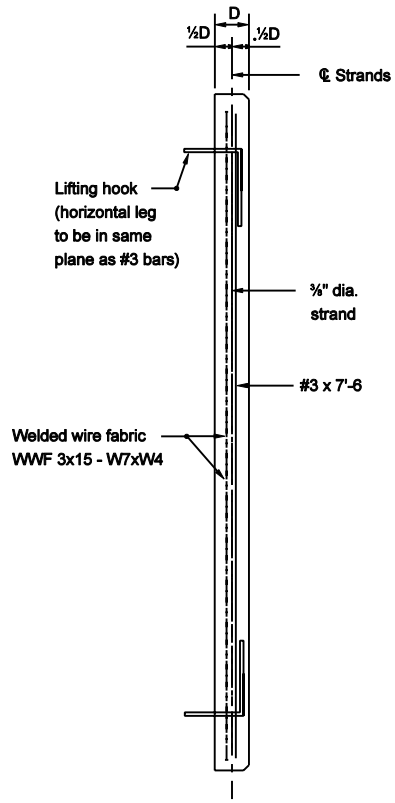

SECTION A-A

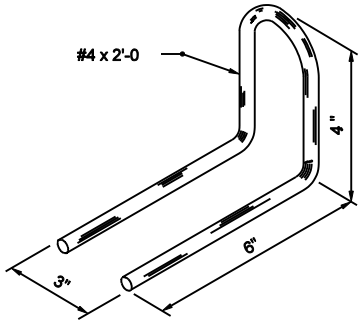

LIFTING HOOK DETAIL

NOTES :

(1) See Standard Drawing E 707-BPDP-02 for Strand Table and General Notes.

(2) See Standard Drawings E 707-BPDP-04 and -05 for details.

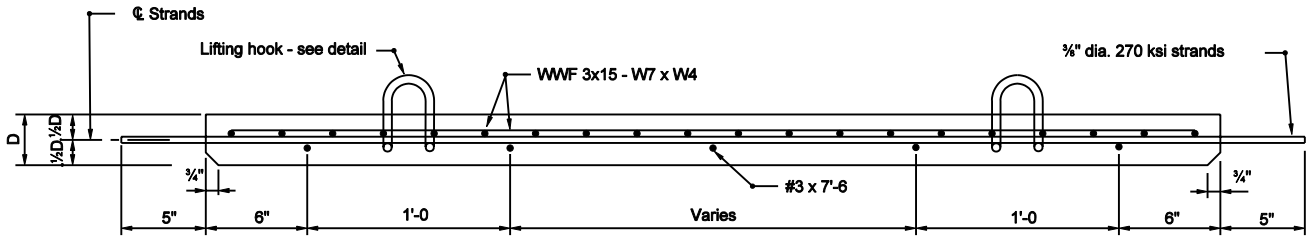

SECTION B-B

INDIANA DEPARTMENT OF TRANSPORTATION

PRECAST DECK PANEL PLAN AND SECTIONS

SEPTEMBER 2003

STANDARD DRAWING NO. E 707-BPDP-01

RICHARD L. VANCLEAVE REGISTERED No. 9750 STATE OF INDIANA PROFESSIONAL ENGINEER

DESIGN STANDARDS ENGINEER

/s/ Richard L. VanCleave 9-02-03
DESIGN STANDARDS ENGINEER DATE

/s/ Richard K. Smutzer 9-02-03
CHIEF HIGHWAY ENGINEER DATE