NOTES

1. All reinforcing bars designated "E" shall be epoxy coated.
2. See standard Drawing E 706-BRTX-03 for bar bending details.

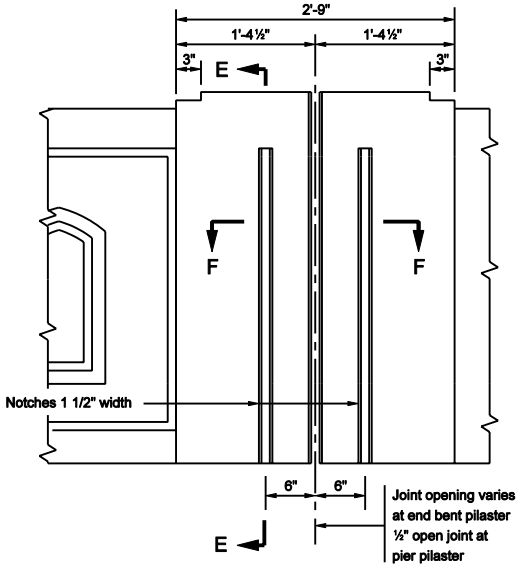

ELEVATION

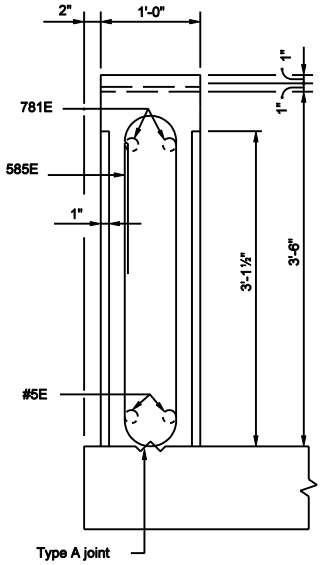

SECTION E-E

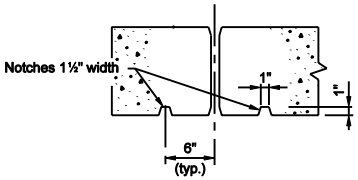

SECTION F-F

INDIANA DEPARTMENT OF TRANSPORTATION

RAILING, TX
(Pier or End Bent Pilaster)

SEPTEMBER 2003

STANDARD DRAWING NO. E 706-BRTX-04

RICHARD L. VanCLEAVE REGISTERED No. 9750 STATE OF INDIANA PROFESSIONAL ENGINEER

DESIGN STANDARDS ENGINEER

/s/ Richard L. VanCleave 9-02-03
DESIGN STANDARDS ENGINEER DATE

/s/ Richard K. Smutzer 9-02-03
CHIEF HIGHWAY ENGINEER DATE