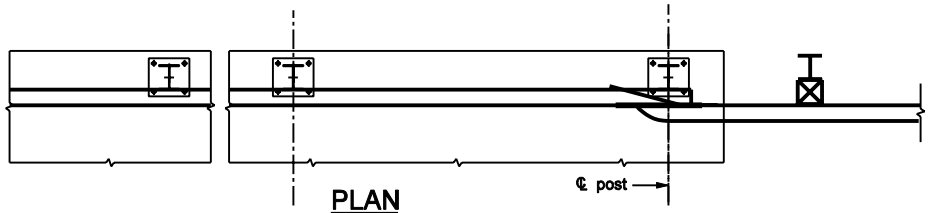

PLAN

Scale: None

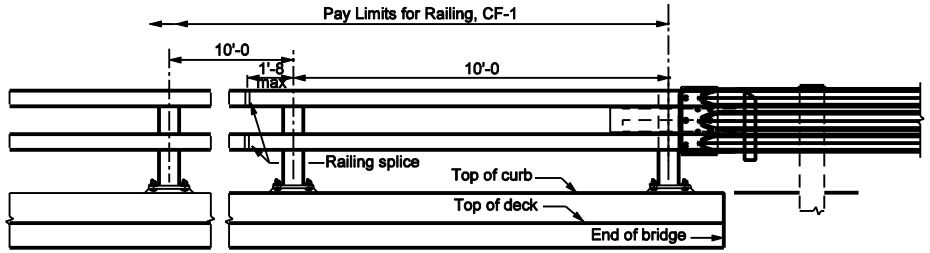

ELEVATION

Scale: None

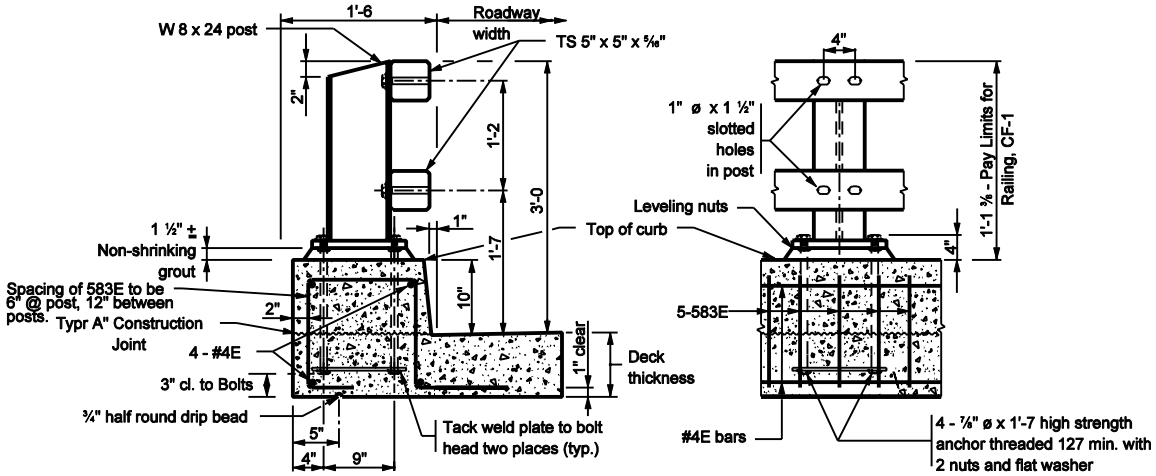

CURB AND POST DETAILS

Scale: None

NOTES :

1. Guardrail connection may be omitted on exit end of one-way structure when omitted in detail plans.
2. Railing units shall be continuous over 2 or more posts.
3. See Standard Drawing E 706-BRTM-02 for Base Plate details, Anchor Plate details, Railing Splice details and Tube Size details.
4. See Standard Drawing E 601-TBGC-01 and E 601-TBGC-02 for Thrie-Beam components.
5. See Standard Drawing E 703-BRST-01 for standard 180° bar bending detail.
6. See Standard Drawing E 601-TTGT-01 and E 601-TTGT-02 for Guardrail Transition, TGT.
7. All reinforcing bars designated "E" shall be epoxy coated.

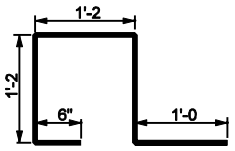

1683E x 1475

(Typical for 8" deck only)

*Adjust bar height for various deck thickness

INDIANA DEPARTMENT OF TRANSPORTATION

RAILING, CF-1

SEPTEMBER 2002

STANDARD DRAWING NO. E 706-BRTM-01

RICHARD L. VanCLEAVE REGISTERED No. 9750 STATE OF INDIANA PROFESSIONAL ENGINEER

DESIGN STANDARDS ENGINEER

/s/ Richard L. VanCleave 9-03-02
DESIGN STANDARDS ENGINEER DATE

/s/ Richard K. Smulzer 9-03-02
CHIEF HIGHWAY ENGINEER DATE