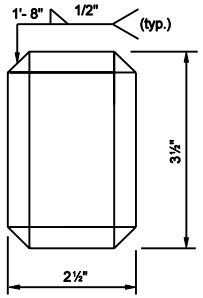

FINISHED DIMENSIONS
OF INNER SLEEVE FOR
TS 4" x 3" x ¼"

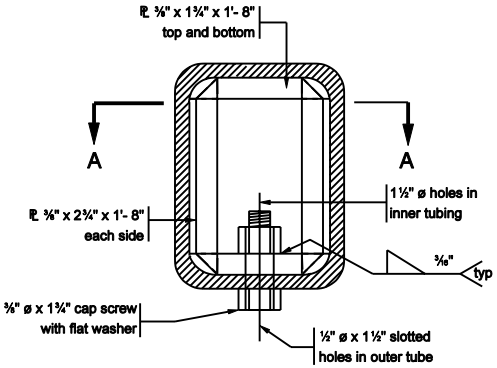

INNER SLEEVE FOR
TS 4" x 3" x ¼"

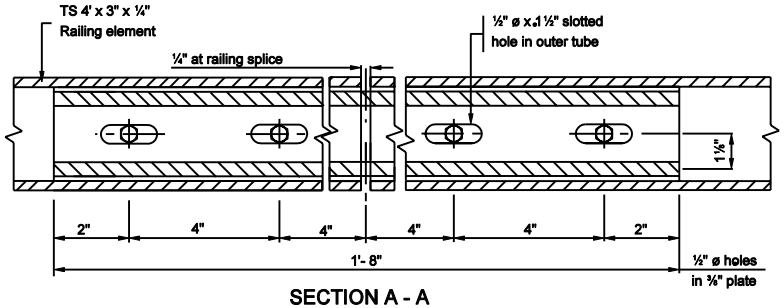

SECTION A - A

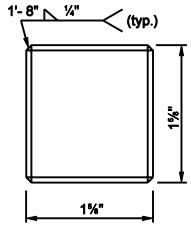

FINISHED DIMENSIONS
OF INNER SLEEVE FOR
TS 2" x 2" x 3/16"

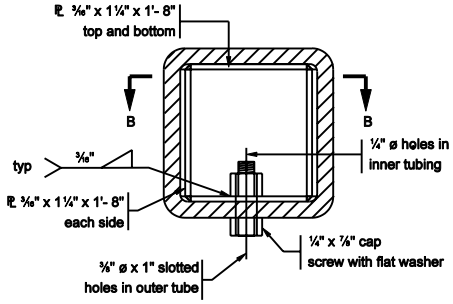

INNER SLEEVE FOR
TS 2" x 2" x 3/16"

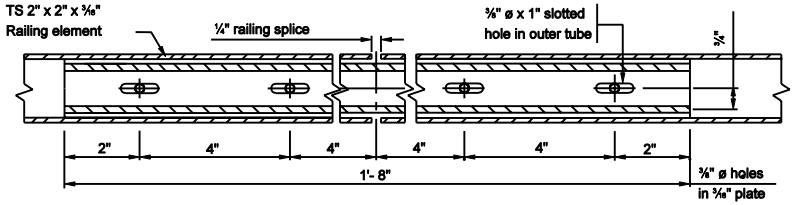

SECTION B - B

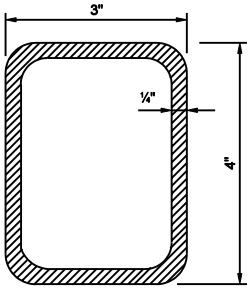

TS 4" x 3" x ¼"

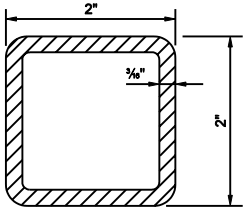

TS 2" x 2" x 3/16"

INDIANA DEPARTMENT OF TRANSPORTATION

RAILING, PF & PS DETAILS

SEPTEMBER 2003

STANDARD DRAWING NO. E 706-BRPP-05

RICHARD L. VanCLEAVE
REGISTERED
No. 9750
STATE OF INDIANA
PROFESSIONAL ENGINEER

DESIGN STANDARDS ENGINEER

/s/ Richard L. VanCleave 9-02-03
DESIGN STANDARDS ENGINEER DATE

/s/ Richard K. Smutzer 9-02-03
CHIEF HIGHWAY ENGINEER DATE