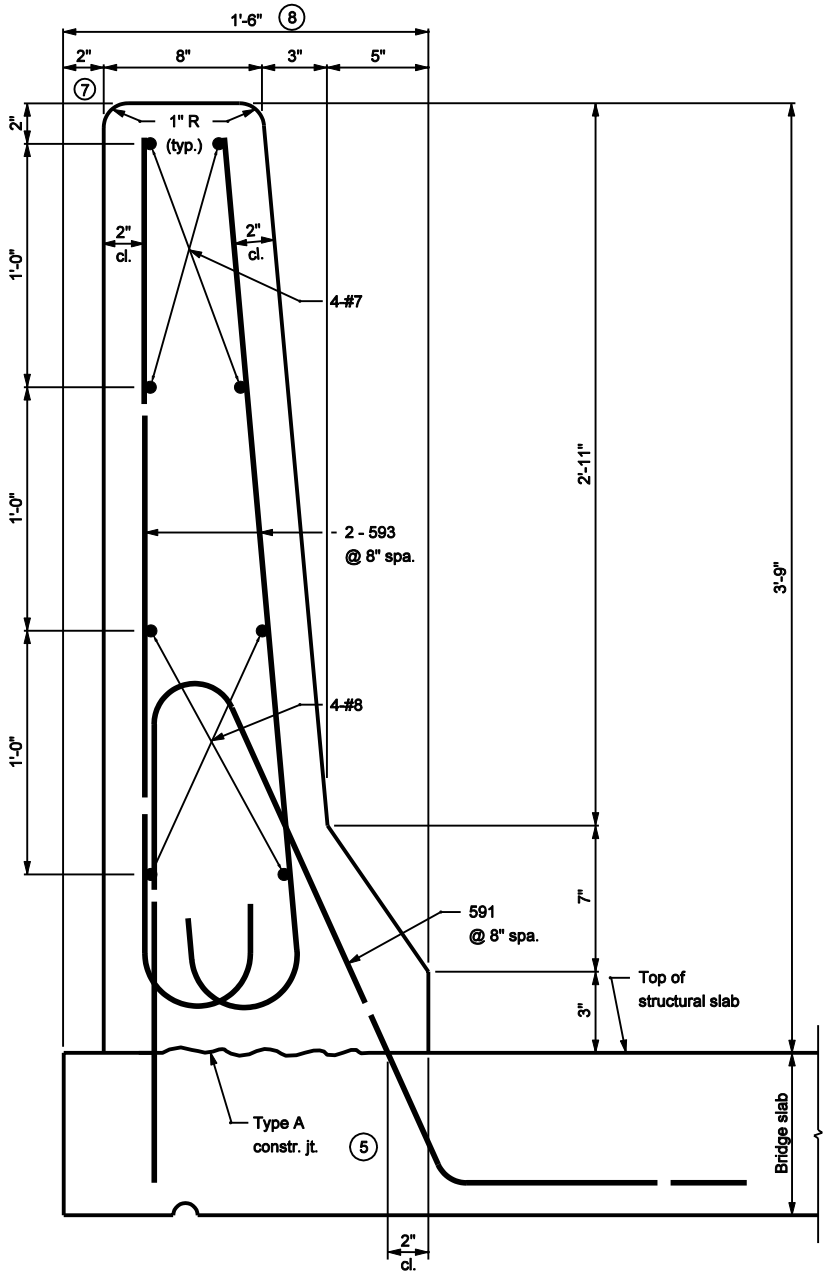

NOTE

1. See Standard Drawing E 706-BCBR-04 for General Notes.

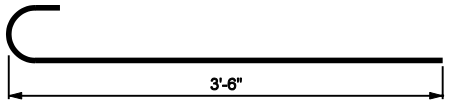

593 x 4'-1"

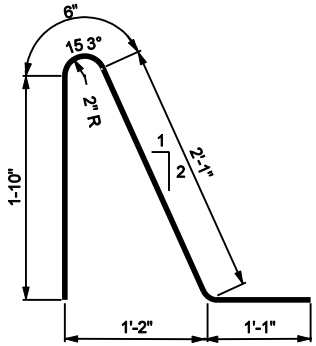

591a x 5'-6"

INDIANA DEPARTMENT OF TRANSPORTATION

TRUCH 45" HEIGHT CONCRETE BRIDGE RAILING

MARCH 2003

STANDARD DRAWING NO. E 706-BCBR-02

RICHARD L. VanCLEAVE REGISTERED No. 9750 STATE OF INDIANA PROFESSIONAL ENGINEER

DESIGN STANDARDS ENGINEER

/s/ Richard L. VanCleave 3-03-03
DESIGN STANDARDS ENGINEER DATE

/s/ Richard K. Smutzer 3-03-03
CHIEF HIGHWAY ENGINEER DATE