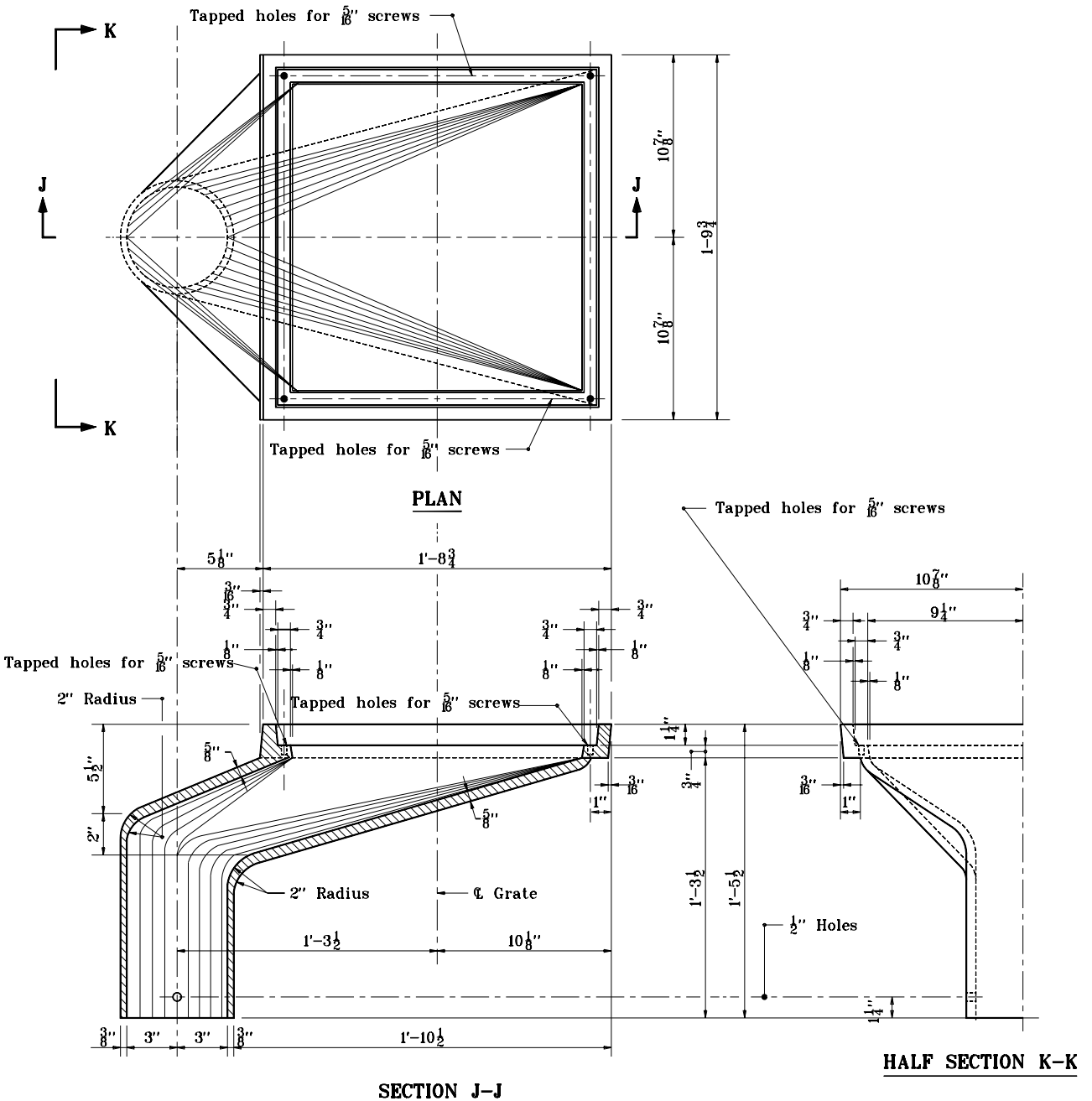

GENERAL NOTES

1. For attaching pipe to all drains, use 3/8"Ø x 1 1/2" hex bolts with 2-3/8" lock washers and 2-3/8" nuts. (All parts galvanized)

2. The approximate weight of the drain is 242 lb.

INDIANA DEPARTMENT OF TRANSPORTATION

CASTING DETAILS
ROADWAY DRAIN TYPE OS

SEPTEMBER 1994

STANDARD DRAWING NO. E 704-BDCG-03

ANTHONY L. UREMOVICH REGISTERED No. 18095 STATE OF INDIANA PROFESSIONAL ENGINEER

DESIGN STANDARDS ENGINEER

DETAILS PLACED IN THIS FORMAT	11-15-99
/s/ Anthony L. Uremovich DESIGN STANDARDS ENGINEER	11-15-99 DATE
/s/ Firooz Zandi CHIEF HIGHWAY ENGINEER	11-15-99 DATE
ORIGINALLY APPROVED	9-03-94